

IN-WALL SYSTEMS

# L2 DUAL - Chrome dual flush operating plate for concealed cistern

## MEASURES

| | |
|---|---|
| Length | 236 mm |
| Width | 9 mm |
| Height | 152 mm |

## COLOURS AND FINISHES

1 Chrome

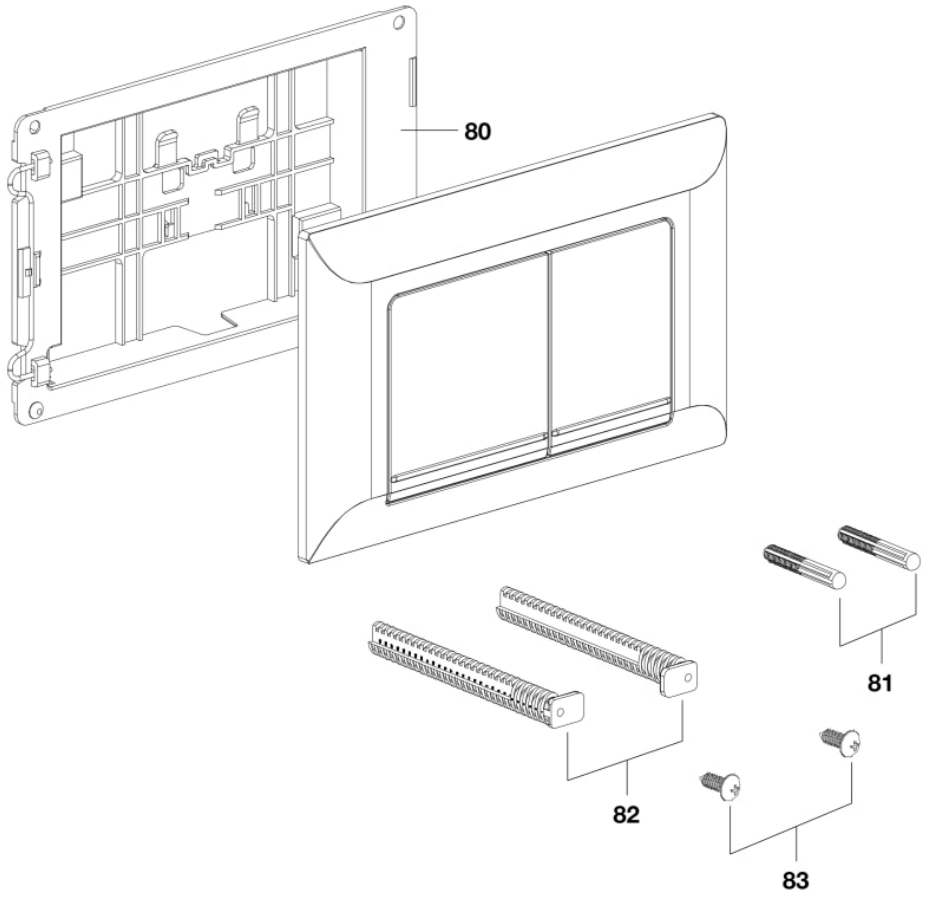


© Copyright 2026, Roca Sanitario, S.A. - All rights reserved | 28-11-2026 |
http://www.roca.com/products/l2-dual-chrome-dual-flush-operating-plate-concealed-cistern-890087001?sku=A890087001