

IN-WALL SYSTEMS

L1 DUAL - Dual flush operating plate for concealed cistern

MEASURES

Length	236 mm
Width	16 mm
Height	152 mm

COLOURS AND FINISHES

0 White

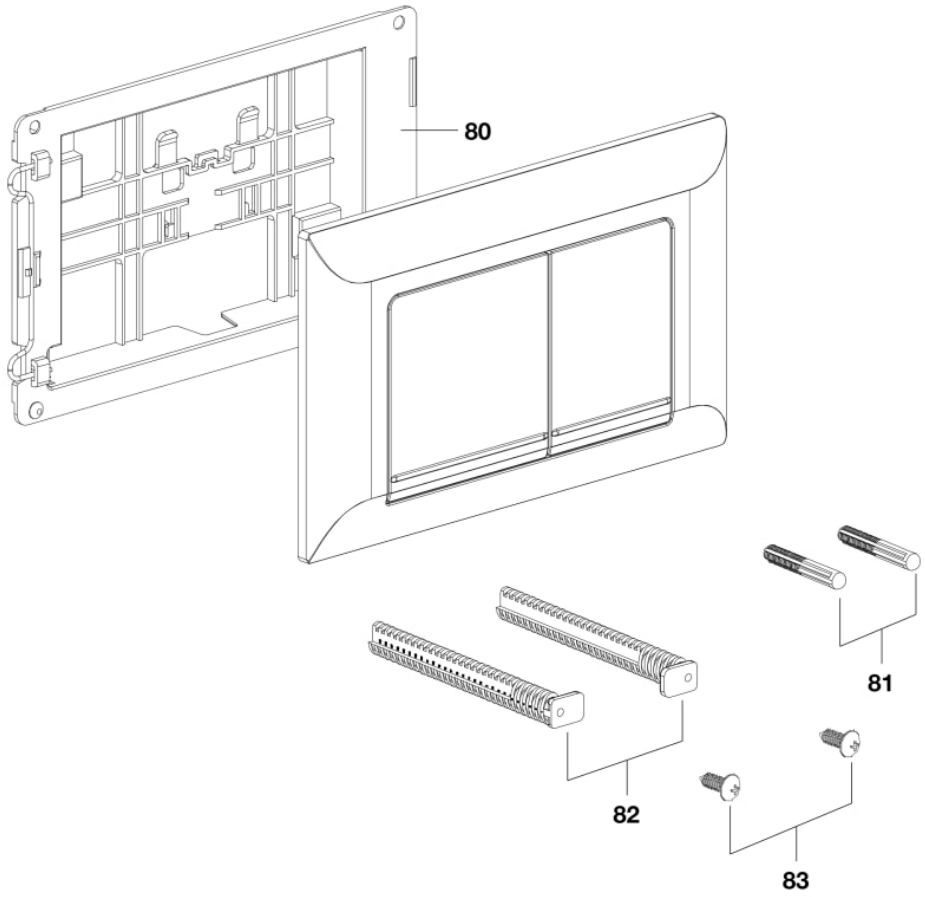

© Copyright 2026, Roca Sanitario, S.A. - All rights reserved | 28-11-2026 |
http://www.roca.com/products/l1-dual-dual-flush-operating-plate-concealed-cistern-89008600.?sku=A890086000