

CARMEN

Base unit with two drawers and two doors for in countertop basin

MEASURES

Length	1300 mm
Width	495 mm
Height	831 mm

COLOURS AND FINISHES

509 Matt White

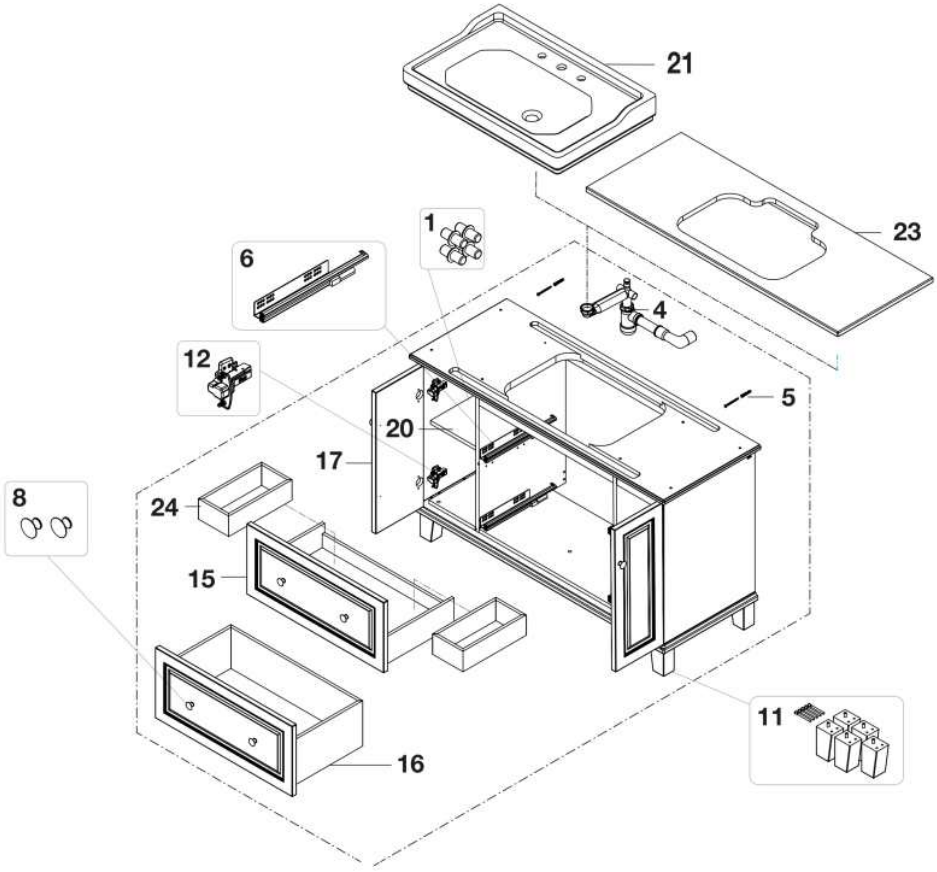

© Copyright 2026, Roca Sanitario, S.A. - All rights reserved | 28-11-2026 |
http://www.roca.com/products/base-unit-two-drawers-two-doors-countertop-basin-858088...?sku=A858088509

Spareparts

Support for Victoria shelf	AU0004100R	1	8 ut	£5.10 PVPR (IVA excluded)
Compact trap with flexible outlet	AU0014100R	4		£43.70 PVPR (IVA excluded)
Wall fixing set for furniture	AU0081800R	5	2 ut	£1.02 PVPR (IVA excluded)
Full-extension 350mm drawer runners set	AU0089400R	6		£35.20 PVPR (IVA excluded)
KIT HANDLE KNOB (2UN) CARMEN	AU0151600R	8	2 ut	
KIT FURNITURE LEGS (5UN) WHITE	AU01519MWR	11	5 ut	
KIT HINGE + PLN (2UN)	AU0152000R	12	2 ut	
KIT UPPER DRAWER 1300MM MATT WHITE	AU01523MWR	15		
KIT BOTTON DRAWER 1300MM MATT WHITE	AU01524MWR	16		
KIT FRONT DOOR CARMEN 248MM MATT WHITE	AU01525MWR	17		
KIT SHELF 237X345X16	AU0152800R	20		
KIT DRAWER ORGANIZER 322X155X90	AU0152900R	24		

© Copyright 2026, Roca Sanitario, S.A. - All rights reserved | 28-11-2026 |
http://www.roca.com/products/base-unit-two-drawers-two-doors-countertop-basin-858088...?sku=A858088509