

CARMEN

Unik - Base unit with two drawers and basin with three tapholes

MEASURES

Length	800 mm
Width	500 mm
Height	875 mm

COLOURS AND FINISHES

509 Matt White

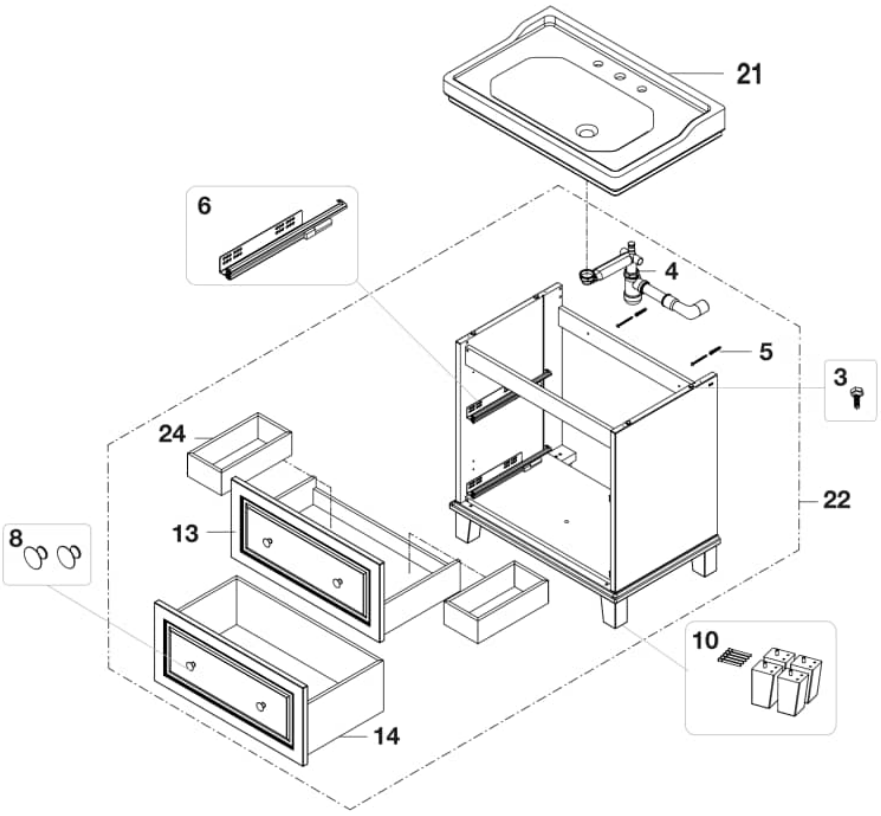

© Copyright 2026, Roca Sanitario, S.A. - All rights reserved | 28-11-2026 |
http://www.roca.com/products/unik-base-unit-two-drawers-basin-three-tapholes-852534...?sku=A852534509

Spareparts

KIT ADJUSTING SCREWS	AU0104700R	3	4 ut	
Compact trap with flexible outlet	AU0014100R	4		£43.70 PVPR (IVA excluded)
Wall fixing set for furniture	AU0081800R	5	2 ut	£1.02 PVPR (IVA excluded)
Full-extension 350mm drawer runners set	AU0089400R	6		£35.20 PVPR (IVA excluded)
KIT HANDLE KNOB (2UN) CARMEN	AU0151600R	8	2 ut	
KIT FURNITURE LEGS (4UN) WHITE	AU01518MWR	10	4 ut	
KIT UPPER DRAWER 800MM MATT WHITE	AU01521MWR	13		
KIT BOTTON DRAWER 800MM MATT WHITE	AU01522MWR	14		
KIT DRAWER ORGANIZER 322X155X90	AU0152900R	24		

RECAMBIOS COMPATIBLES

VANITY UNIT CARMEN 2DW 800	A858087509	22

© Copyright 2026, Roca Sanitario, S.A. - All rights reserved | 28-11-2026 |
http://www.roca.com/products/unik-base-unit-two-drawers-basin-three-tapholes-852534...?sku=A852534509