

AMERICA

Universal bottom fill valve kit

MEASURES

Length	400 mm
Width	135 mm
Height	90 mm

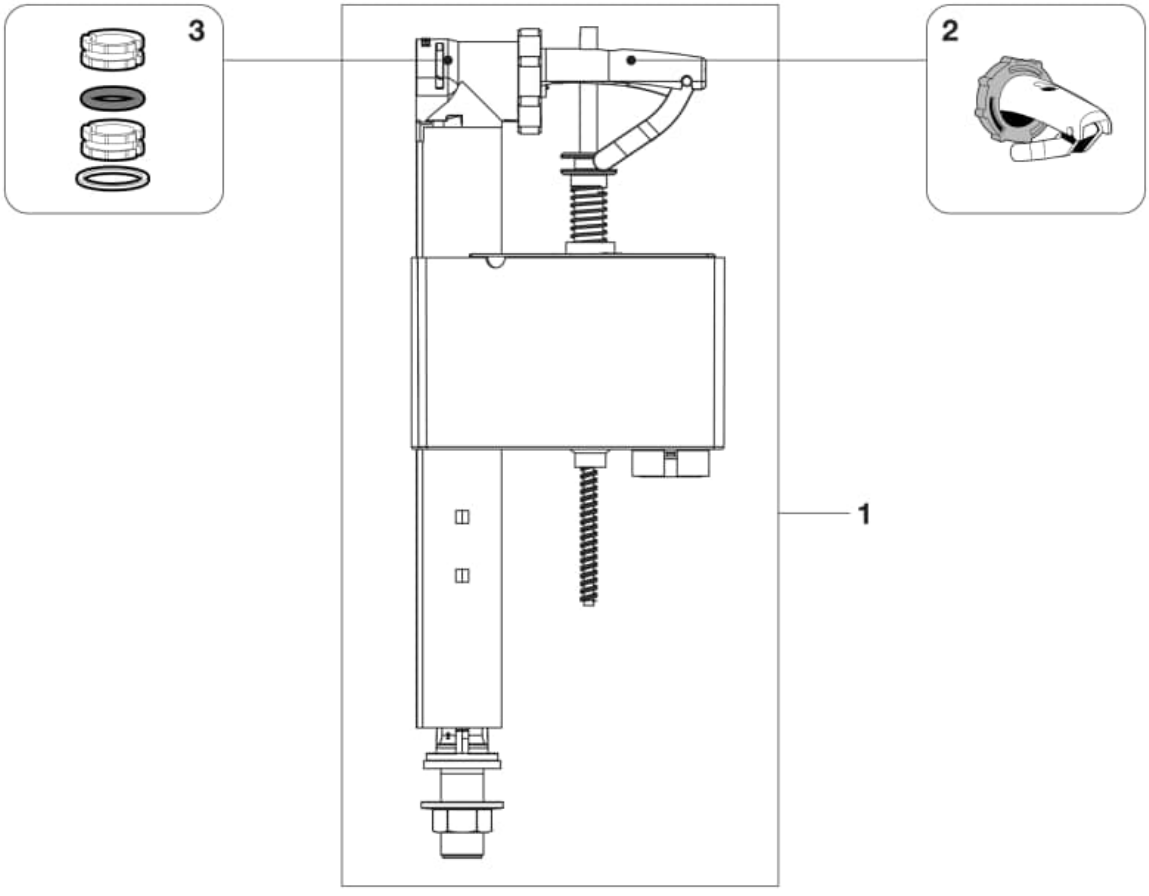

© Copyright 2026, Roca Sanitario, S.A. - All rights reserved | 28-11-2026 |
http://www.roca.com/products/universal-bottom-fill-valve-kit-822502300?sku=A822502300

Spareparts

Lever set for A3 inlet mechanisms	AV0021100R	2	£2.65 PVPR (IVA excluded)
Connection sleeve accessories for L-20 tap	AG0143600R	3	£2.58 PVPR (IVA excluded)

© Copyright 2026, Roca Sanitario, S.A. - All rights reserved | 28-11-2026 |
http://www.roca.com/products/universal-bottom-fill-valve-kit-822502300?sku=A822502300