

VICTORIA (ACC)

Wall-mounted tumbler holder (installation with screws or adhesive)

MEASURES

Length	74 mm
Width	79 mm
Height	123 mm

COLOURS AND FINISHES

C0 Chrome

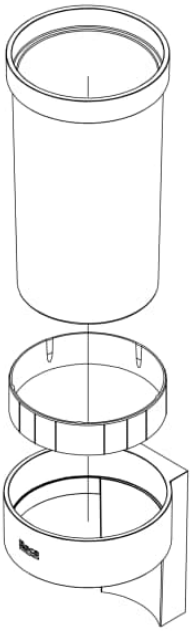

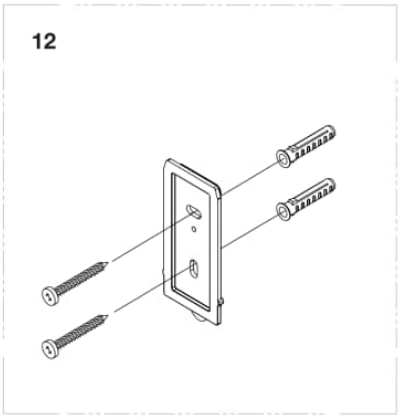

© Copyright 2026, Roca Sanitario, S.A. - All rights reserved | 28-11-2026 |
http://www.roca.com/products/wall-mounted-tumbler-holder-installation-screws-adhesive-817894..0?sku=A817894C00

Spareparts

Fixing for accessories	AA0020300R	12	£15.00 PVPR (IVA excluded)

© Copyright 2026, Roca Sanitario, S.A. - All rights reserved | 28-11-2026 |
http://www.roca.com/products/wall-mounted-tumbler-holder-installation-screws-adhesive-817894..0?sku=A817894C00