VICTORIA (ACC)

Toilet roll holder without cover (installation with screws or adhesive)



MEASURES

Length	182 mm
Width	64 mm
Height	52 mm

COLOURS AND FINISHES

C0 Chrome

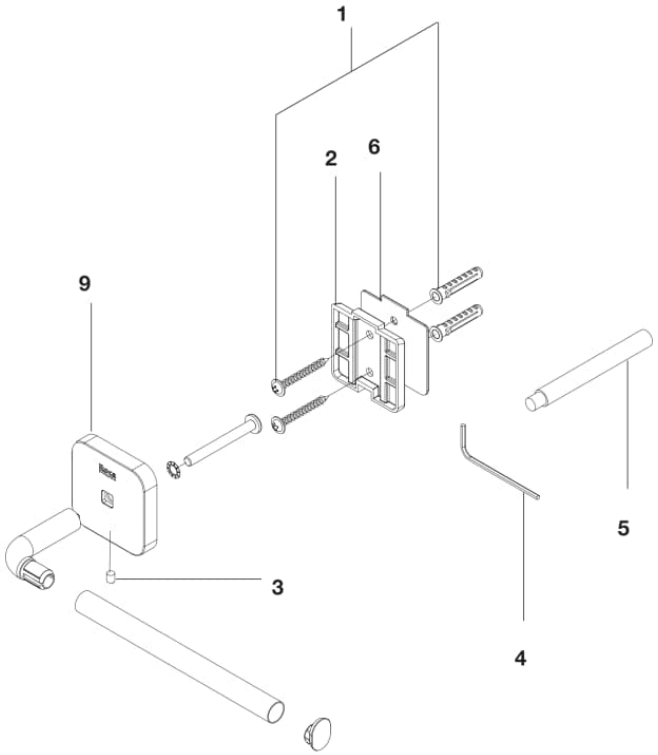

© Copyright 2026, Roca Sanitario, S.A. - All rights reserved | 28-11-2026 |
http://www.roca.com/products/toilet-roll-holder-without-cover-installation-screws-adhesive-817890..0?sku=A817890C00

Spareparts

Victoria wall anchoring support kit	A840797000	1|2|3|4	£2.95 PVPR (IVA excluded)
Victoria Square Adhesive Kit	A840804000	5|6	£11.90 PVPR (IVA excluded)
Bathroom accessories rosette Victoria/Adagio	AA0022800R	9|3|4	

© Copyright 2026, Roca Sanitario, S.A. - All rights reserved | 28-11-2026 |
http://www.roca.com/products/toilet-roll-holder-without-cover-installation-screws-adhesive-817890..0?sku=A817890C00