VICTORIA (ACC)

Toilet roll holder with shelf (installation with screws or adhesive).



MEASURES

Length	150 mm
Width	90 mm
Height	62 mm

COLOURS AND FINISHES

C0 Chrome

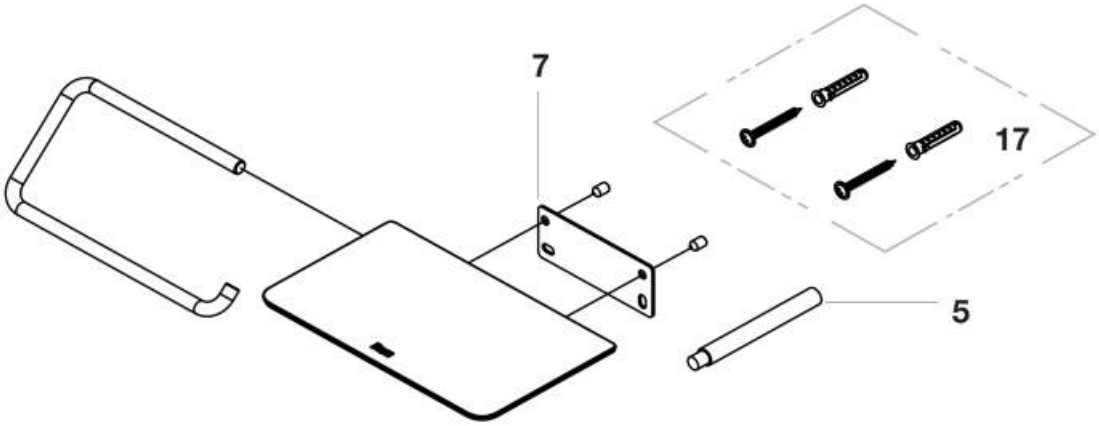

© Copyright 2026, Roca Sanitario, S.A. - All rights reserved | 20-11-2026 |
http://www.roca.com/products/toilet-roll-holder-shelf-installation-screws-adhesive-817889..0?sku=A817889C00

Spareparts

Wall fixing for bathroom accessory (2pcs)	AA0022900R	17	
Victoria Square Adhesive Kit	A840804000	5|7	£11.90 PVPR (IVA excluded)

© Copyright 2026, Roca Sanitario, S.A. - All rights reserved | 20-11-2026 |
http://www.roca.com/products/toilet-roll-holder-shelf-installation-screws-adhesive-817889..0?sku=A817889C00