VICTORIA (ACC)

Towel rack



MEASURES

Length	608 mm
Width	199 mm
Height	104 mm

COLOURS AND FINISHES

C0 Chrome

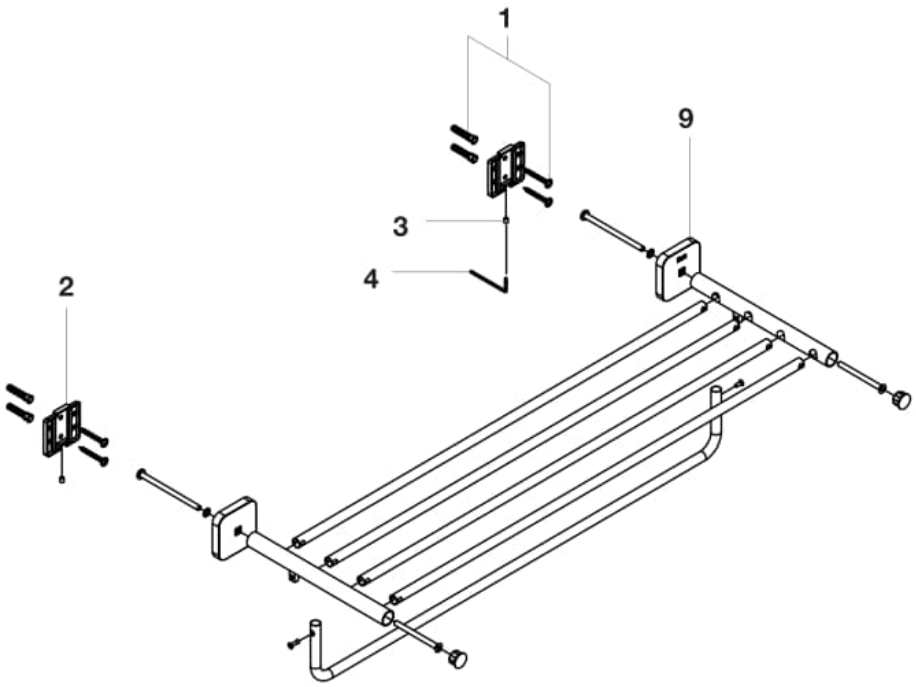

© Copyright 2026, Roca Sanitario, S.A. - All rights reserved | 28-11-2026 | http://www.roca.com/products/towel-rack-817887..0?sku=A817887C00

Spareparts

Victoria wall anchoring support kit	A840797000	1|2|3|4	£2.95 PVPR (IVA excluded)
Bathroom accessories rosette Victoria/Adagio	AA0022800R	9|3|4	

© Copyright 2026, Roca Sanitario, S.A. - All rights reserved | 28-11-2026 | http://www.roca.com/products/towel-rack-817887..0?sku=A817887C00