VICTORIA (ACC)

Double swivel towel rail



MEASURES

Length	373 mm
Width	31 mm
Height	52 mm

COLOURS AND FINISHES

C0 Chrome

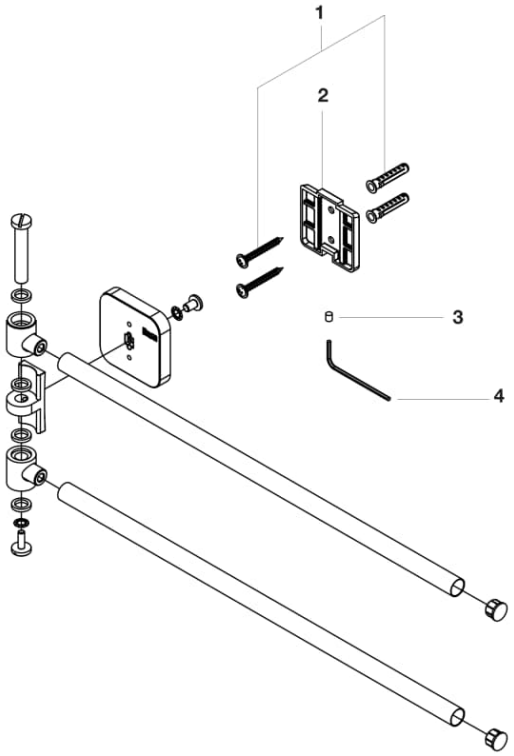

© Copyright 2026, Roca Sanitario, S.A. - All rights reserved | 28-11-2026 | http://www.roca.com/products/double-swivel-towel-rail-817885..0?sku=A817885C00

Spareparts

Victoria wall anchoring support kit	A840797000	1|2|3|4	£2.95 PVPR (IVA excluded)

© Copyright 2026, Roca Sanitario, S.A. - All rights reserved | 28-11-2026 | http://www.roca.com/products/double-swivel-towel-rail-817885..0?sku=A817885C00