VICTORIA (ACC)

Double robe hook (installation with screws or adhesive)



MEASURES

Length	135 mm
Width	36 mm
Height	45 mm

COLOURS AND FINISHES

C0 Chrome

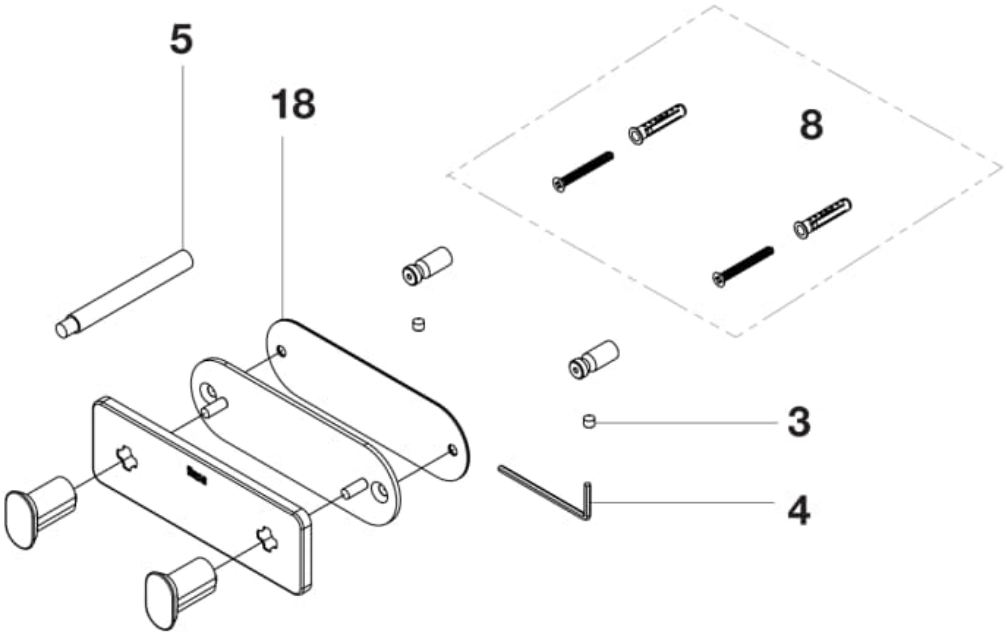

© Copyright 2026, Roca Sanitario, S.A. - All rights reserved | 28-11-2026 |
http://www.roca.com/products/double-robe-hook-installation-screws-adhesive-817881..0?sku=A817881C00

Spareparts

Fixings for accessories	A840737000	8	2 ut	£5.10 PVPR (IVA excluded)
Victoria wall anchoring support kit	A840797000	3|4		£2.95 PVPR (IVA excluded)
Wall-fixing adhesive for bathroom accessory (2pcs)	AA0023000R	18|5		

© Copyright 2026, Roca Sanitario, S.A. - All rights reserved | 28-11-2026 |
http://www.roca.com/products/double-robe-hook-installation-screws-adhesive-817881..0?sku=A817881C00