

PUBLIC

High-speed hand dryer with sensor

MEASURES

Width 175 mm

Height 556 mm

COLOURS AND FINISHES

P3 Glossy White

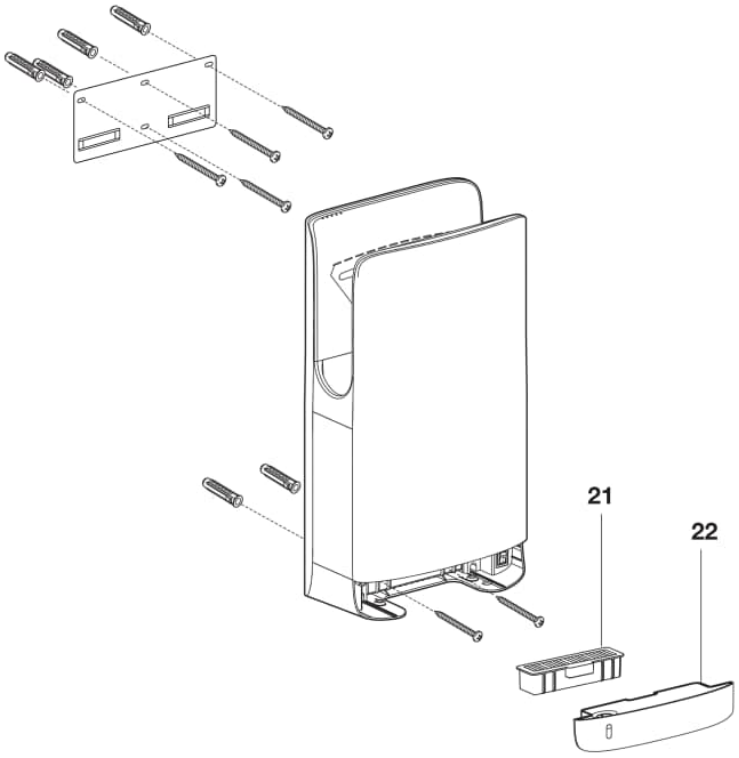

© Copyright 2026, Roca Sanitario, S.A. - All rights reserved | 22-11-2026 |
http://www.roca.com/products/high-speed-hand-dryer-sensor-817421..0?sku=A817421P30

Spareparts

KIT FILTER FOR HAND DRYER	AA0024800R	21
KIT LOWER TRAY FOR HAND DRYER	AA00251P3R	22

© Copyright 2026, Roca Sanitario, S.A. - All rights reserved | 22-11-2026 |
http://www.roca.com/products/high-speed-hand-dryer-sensor-817421..0?sku=A817421P30