HOTELS 2_0

Wall-mounted magnifying (x3) mirror with articulated arm and light

MEASURES

Length	455 mm
Width	210 mm
Height	210 mm

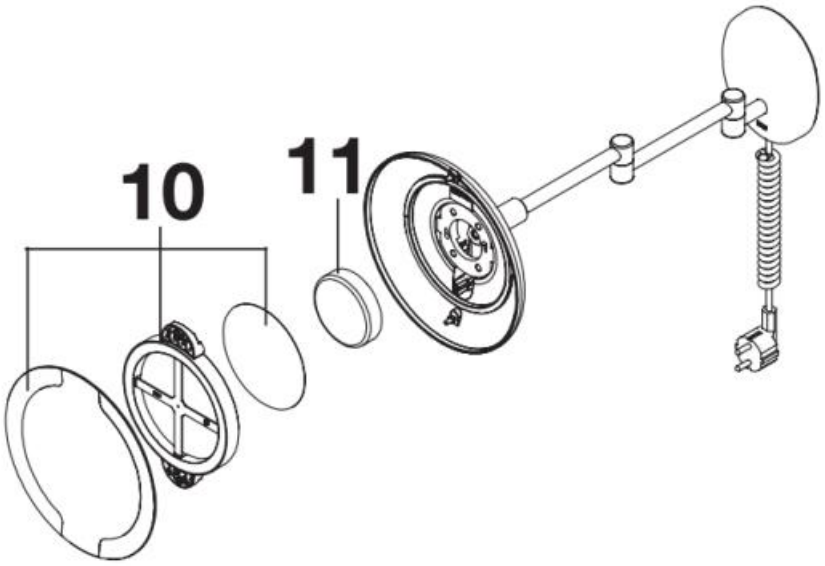

© Copyright 2026, Roca Sanitario, S.A. - All rights reserved | 14-11-2026 |
http://www.roca.com/products/wall-mounted-magnifying-x3-mirror-articulated-arm-light-816380001?sku=A816380001

Spareparts

Hotel mirror replacement kit with light	A840733000	10	£30.70 PVPR (IVA excluded)
Gx53 9W bulb for mini illuminated mirror Hotels	A840732000	11	£64.00 PVPR (IVA excluded)

© Copyright 2026, Roca Sanitario, S.A. - All rights reserved | 14-11-2026 |
http://www.roca.com/products/wall-mounted-magnifying-x3-mirror-articulated-arm-light-816380001?sku=A816380001