

ONA

Soft-closing Supralit® bidet lid

MEASURES

Length	506 mm
Width	366 mm
Height	44 mm

COLOURS AND FINISHES

00 White

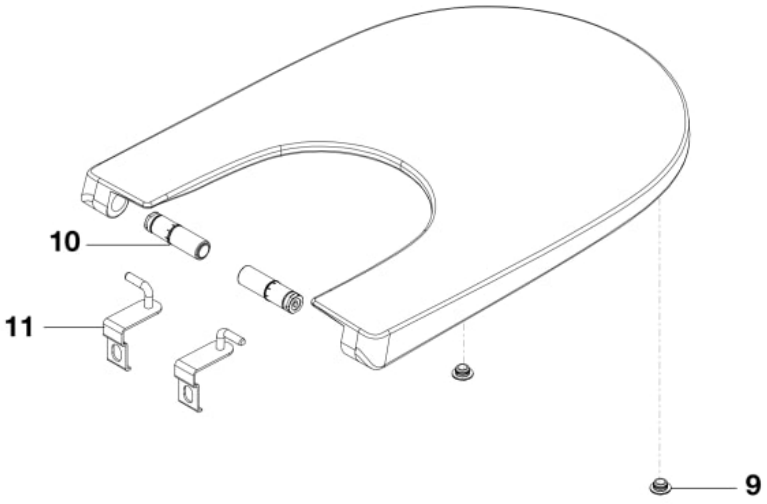

© Copyright 2026, Roca Sanitario, S.A. - All rights reserved | 23-11-2026 | http://www.roca.com/products/soft-closing-supralit-bidet-lid-806E12..1?sku=A806E12001

Spareparts

Supralit Ona lid stop kit (2un)	AI0026300R	9	£2.62 PVPR (IVA excluded)
Free-fall hinges for Ona bidet lid	AI0025800R	10	£8.48 PVPR (IVA excluded)
Fixings for bidet lid hinges Ona Chrome	AI0025900R	11	£22.00 PVPR (IVA excluded)

© Copyright 2026, Roca Sanitario, S.A. - All rights reserved | 23-11-2026 |
http://www.roca.com/products/soft-closing-supralit-bidet-lid-806E12..1?sku=A806E12001