THE GAP

Square - Soft-closing Supralit® bidet lid



COLOURS AND FINISHES

00 White

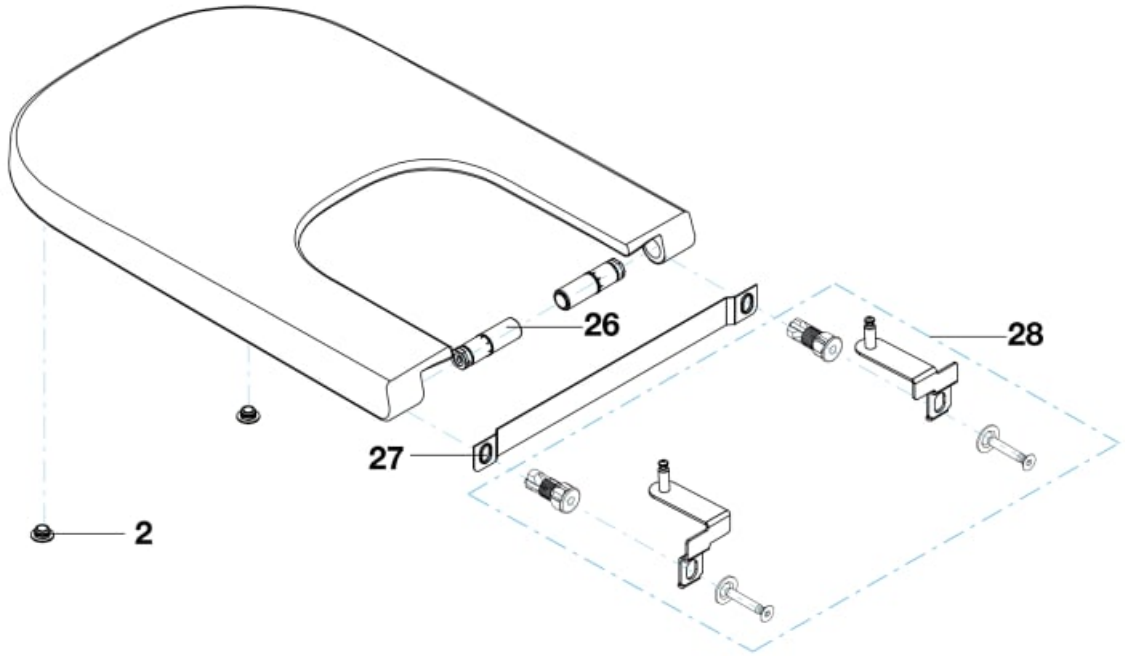

© Copyright 2026, Roca Sanitario, S.A. - All rights reserved | 19-11-2026 |
http://www.roca.com/products/square-soft-closing-supralit-bidet-lid-806472..B?sku=A80647200B

Spareparts

Stops for covers Ø18,5x10mm White (2un)	AI0000200R	2	2 ut	£0.95 PVPR (IVA excluded)
Soft-close hinges for The Gap bidet lid	AI0026000R	26		£17.00 PVPR (IVA excluded)
Hinge joining piece for The Gap bidet cover	AI0023700R	27		£4.61 PVPR (IVA excluded)
Fixing for bidet cover V6 21x59x22mm	AI0026500R	28		£36.70 PVPR (IVA excluded)

© Copyright 2026, Roca Sanitario, S.A. - All rights reserved | 19-11-2026 |
http://www.roca.com/products/square-soft-closing-supralit-bidet-lid-806472..B?sku=A80647200B