

ONA

Compact Supralit® WC seat and cover

MEASURES

Length	417 mm
Width	363 mm
Height	46 mm

COLOURS AND FINISHES

00 White

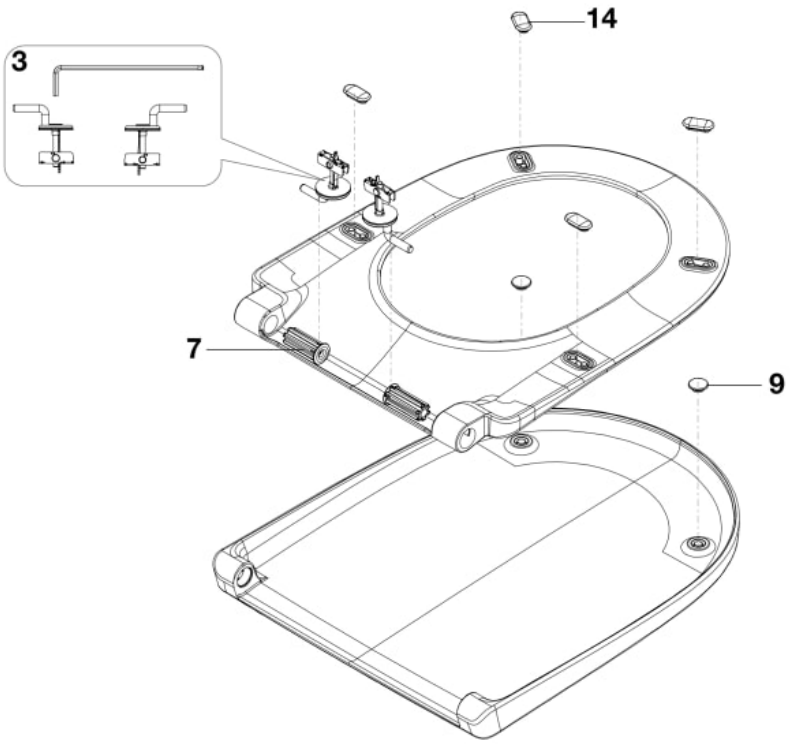

© Copyright 2026, Roca Sanitario, S.A. - All rights reserved | 23-11-2026 |
http://www.roca.com/products/compact-supralit-wc-seat-cover-801E20..1?sku=A801E20001

Spareparts

Free-fall hinges for Ona toilet seat and lid	AI0024800R	3	£8.83 PVPR (IVA excluded)
Bushing for Ona tap (2 un)	AI0025300R	7	£2.73 PVPR (IVA excluded)
Supralit Ona lid stop kit (2un)	AI0026300R	9	£2.62 PVPR (IVA excluded)
Supralit Ona seat bumper kit (4un)	AI0026200R	14	£3.87 PVPR (IVA excluded)

© Copyright 2026, Roca Sanitario, S.A. - All rights reserved | 23-11-2026 |
http://www.roca.com/products/compact-supralit-wc-seat-cover-801E20..1?sku=A801E20001