

THE GAP

Round - Compact soft-closing WC seat and cover

MEASURES

Length	419 mm
Width	357 mm
Height	46 mm

COLOURS AND FINISHES

00 White

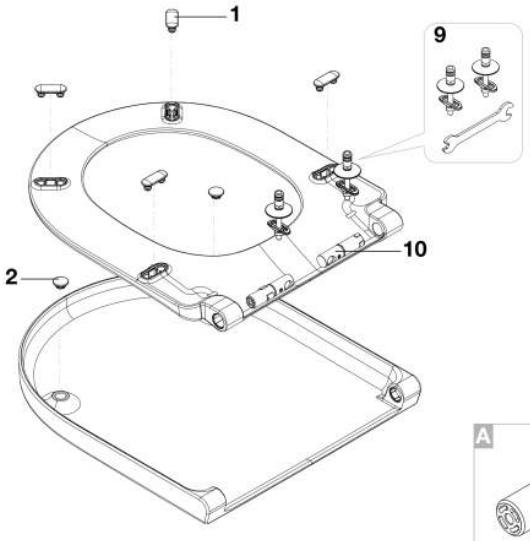

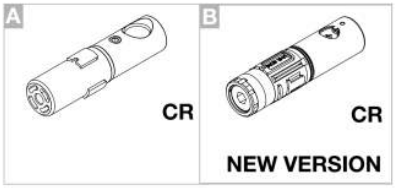

Atención a la versión.
La imagen A corresponde a la versión de bisagras (CR) y fijaciones (CL) hasta 2024.
La imagen B corresponde a la versión de bisagras (CR) y fijaciones (CL) desde 2024.

Attention to the version.
The image A of hinges (CR) and fixings (CL) are the version until 2024.
The image B of hinges (CR) and fixings (CL) are the version from 2024.

© Copyright 2026, Roca Sanitario, S.A. - All rights reserved | 26-11-2026 |
http://www.roca.com/products/round-compact-soft-closing-wc-seat-cover-801D22..1?sku=A801D22001

Spareparts

White toilet seat stopper 36.5x14.5x4.5mm (4un)	AI0009100R	1	4 ut	£1.22 PVPR (IVA excluded)
Stops for covers Ø18,5x10mm White (2un)	AI0000200R	2	2 ut	£0.95 PVPR (IVA excluded)
Fixings for hinges with soft close	AI0022600R	9		£13.30 PVPR (IVA excluded)
Soft-close hinges for toilet seat and lid 18K + 23K STD	AI0028300R	10		£23.80 PVPR (IVA excluded)
Soft-close hinges for Inspira Round toilet seat and lid	AI0022100R	10	Delayed fall	£25.60 PVPR (IVA excluded)

© Copyright 2026, Roca Sanitario, S.A. - All rights reserved | 26-11-2026 |
http://www.roca.com/products/round-compact-soft-closing-wc-seat-cover-801D22..1?sku=A801D22001