DEBBA

Round - WC seat and cover



MEASURES

Length	443 mm
Width	362 mm
Height	46 mm

COLOURS AND FINISHES

00 White

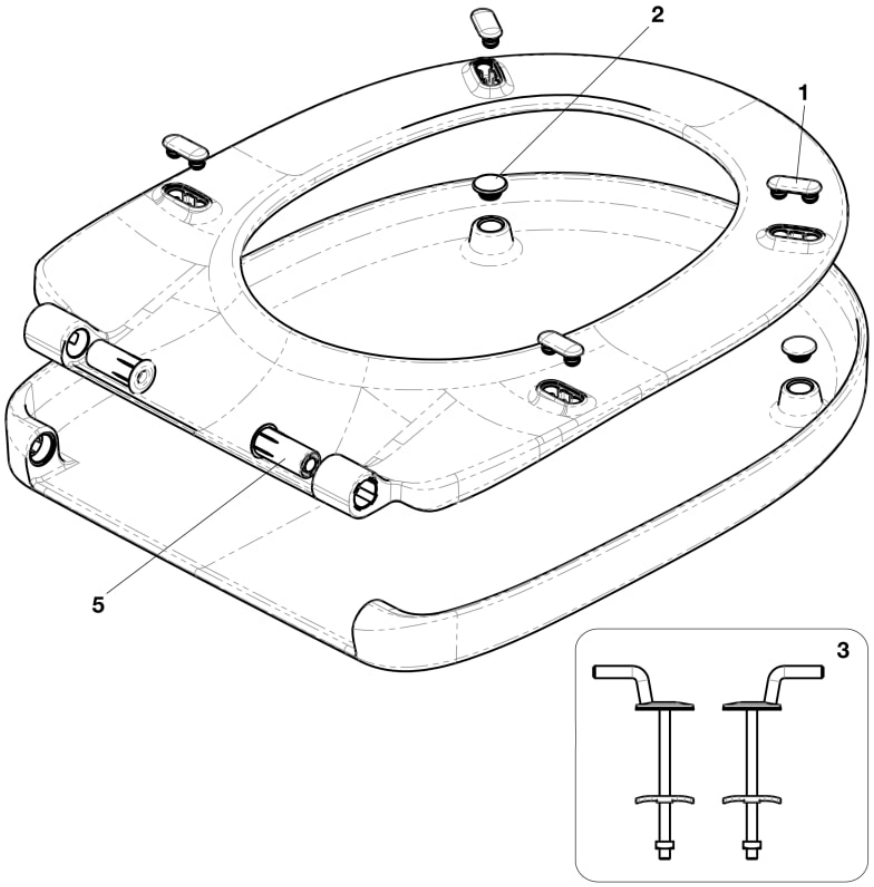

© Copyright 2026, Roca Sanitario, S.A. - All rights reserved | 25-11-2026 | http://www.roca.com/products/round-wc-seat-cover-801B20..B?sku=A801B2000B

Spareparts

Stopper kit 30x12.5x3mm (4un)	AI0012800R	1	4 ut	£4.64 PVPR (IVA excluded)
Stops for covers Ø18,5x10mm White (2un)	AI0000200R	2	2 ut	£0.95 PVPR (IVA excluded)
Free-fall hinges with 21.5x85.5mm fixing for toilet lid and seat	AI0020500R	3		£17.40 PVPR (IVA excluded)
Free-fall hinges for toilet seat and lid (1 unit)	AI0020900R	5	Freefall	£10.30 PVPR (IVA excluded)

© Copyright 2026, Roca Sanitario, S.A. - All rights reserved | 25-11-2026 | http://www.roca.com/products/round-wc-seat-cover-801B20..B?sku=A801B2000B