INSPIRA

# Square - Soft-closing WC seat and cover



## MEASURES

| | |
|---|---|
| Length | 442 mm |
| Width | 372 mm |
| Height | 38 mm |

## COLOURS AND FINISHES

00 White

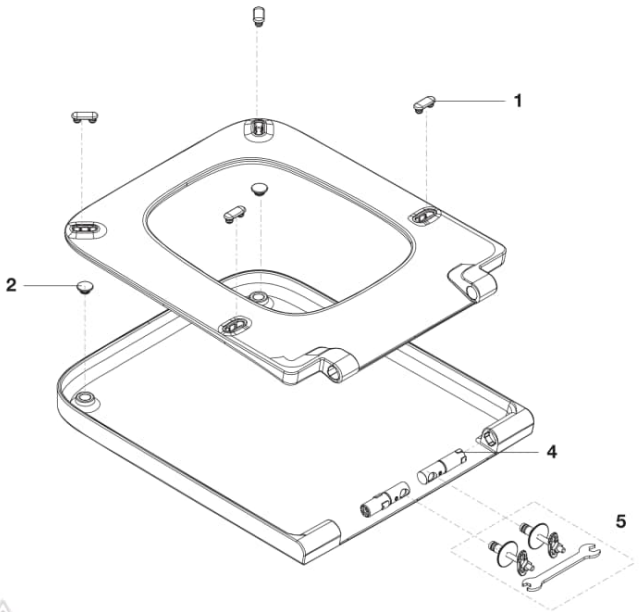


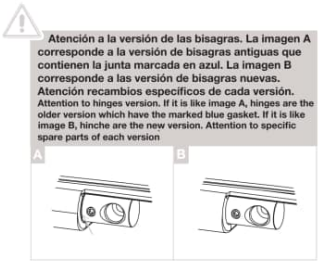


© Copyright 2026, Roca Sanitario, S.A. - All rights reserved | 17-11-2026 |
http://www.roca.com/products/square-soft-closing-wc-seat-cover-801532..B?sku=A80153200B

## Spareparts

| | | | | |
|---|---|---|---|---|
| Stopper kit 30x12.5x3mm (4un) | AI0012800R | 1 | 4 ut | £4.64 PVPR (IVA excluded) |
| Stops for covers Ø18,5x10mm White (2un) | AI0000200R | 2 | 2 ut | £0.95 PVPR (IVA excluded) |
| Fixings for hinges with soft close | AI0022600R | 5 | | £13.30 PVPR (IVA excluded) |

© Copyright 2026, Roca Sanitario, S.A. - All rights reserved | 17-11-2026 |
http://www.roca.com/products/square-soft-closing-wc-seat-cover-801532..B?sku=A80153200B