

INSPIRA

Round - Compact soft-closing WC seat and cover

MEASURES

Length	415 mm
Width	374 mm
Height	38 mm

COLOURS AND FINISHES

00 White

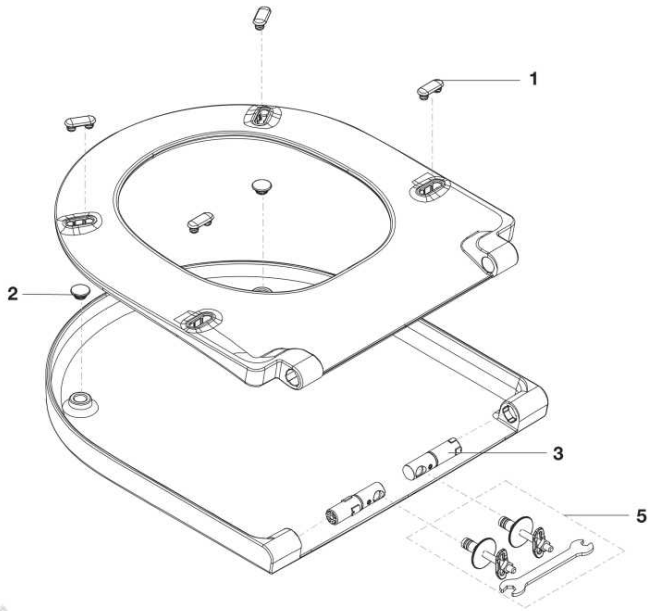

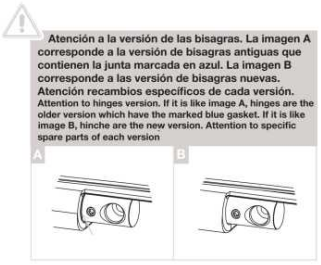

© Copyright 2026, Roca Sanitario, S.A. - All rights reserved | 17-11-2026 |
http://www.roca.com/products/round-compact-soft-closing-wc-seat-cover-80152C..B?sku=A80152C00B

Spareparts

Stopper kit 30x12.5x3mm (4un)	AI0012800R	1	4 ut	£4.64 PVPR (IVA excluded)
Stops for covers Ø18,5x10mm White (2un)	AI0000200R	2	2 ut	£0.95 PVPR (IVA excluded)
Soft-close hinges for Inspira Compact toilet seat	AI0012900R	3.1	Round CPT	£21.20 PVPR (IVA excluded)
Soft-close hinges for Inspira Round toilet seat and lid	AI0022100R	3.2	Delayed fall	£25.60 PVPR (IVA excluded)
Fixings for hinges with soft close	AI0022600R	5		£13.30 PVPR (IVA excluded)

© Copyright 2026, Roca Sanitario, S.A. - All rights reserved | 17-11-2026 |
http://www.roca.com/products/round-compact-soft-closing-wc-seat-cover-80152C..B?sku=A80152C00B