MERIDIAN

Compact WC seat and cover



MEASURES

Length	416 mm
Width	364 mm
Height	46 mm

COLOURS AND FINISHES

00 White

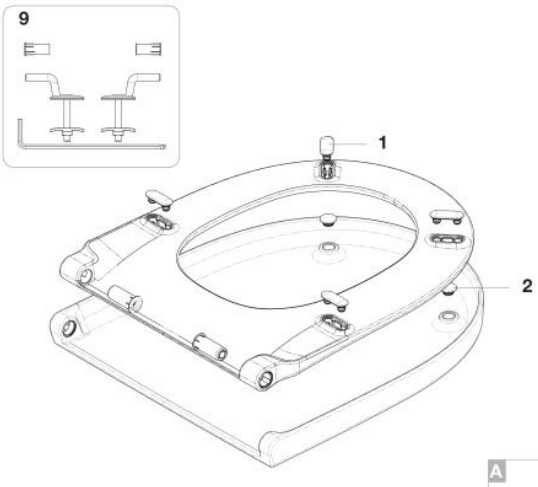

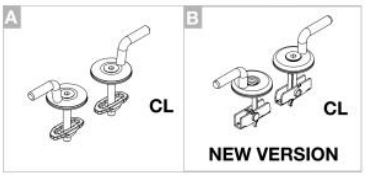

Atención a la versión.
La imagen A corresponde a la versión de bisagras (CR) y fijaciones (CL) hasta 2024.
La imagen B corresponde a la versión de bisagras (CR) y fijaciones (CL) desde 2024.

Attention to the version.
The image A of hinges (CR) and fixings (CL) are the version until 2024.
The image B of hinges (CR)and fixings (CL) are the version from 2024.

© Copyright 2026, Roca Sanitario, S.A. - All rights reserved | 23-11-2026 | http://www.roca.com/products/compact-wc-seat-cover-8012AB..B?sku=A8012AB00B

Spareparts

White toilet seat stopper 36.5x14.5x4.5mm (4un)	AI0009100R	1	4 ut	£1.22 PVPR (IVA excluded)
Stops for covers Ø18,5x10mm White (2un)	AI0000200R	2	2 ut	£0.95 PVPR (IVA excluded)
Free-fall hinges with top fixing for toilet seat and lid	AI0028500R	9		£17.70 PVPR (IVA excluded)
Free-fall hinges for toilet seat and lid (1 unit)	AI0020900R	9	Freefall	£10.30 PVPR (IVA excluded)

© Copyright 2026, Roca Sanitario, S.A. - All rights reserved | 23-11-2026 | http://www.roca.com/products/compact-wc-seat-cover-8012AB..B?sku=A8012AB00B