

ACCESS

Soft-closing seat and cover for toilet

MEASURES

Length	460 mm
Width	373 mm
Height	53 mm

COLOURS AND FINISHES

00 White

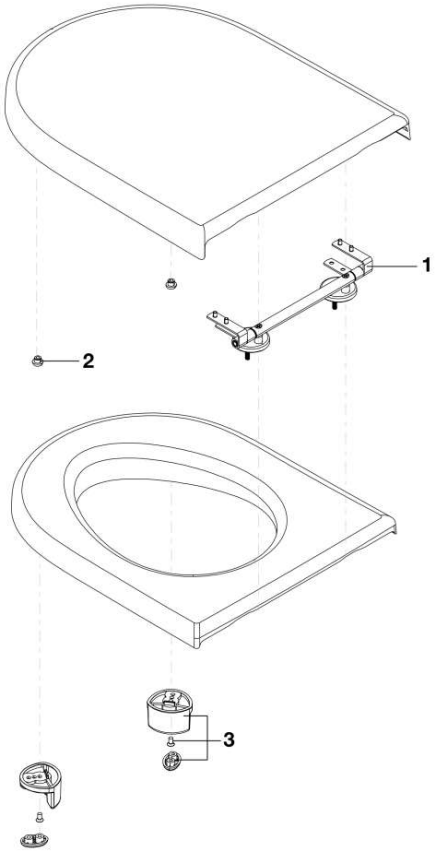

© Copyright 2026, Roca Sanitario, S.A. - All rights reserved | 19-11-2026 | http://www.roca.com/products/soft-closing-seat-cover-toilet-801230..1?sku=A801230001

Spareparts

Hinges and fixings for Access toilet lid	AI0027300R	1	
Toilet lid stoppers Access (2pcs)	AI0027400R	2	2 ut
Toilet seat stoppers with support Access (2pcs)	AI0027500R	3	2 ut

© Copyright 2026, Roca Sanitario, S.A. - All rights reserved | 19-11-2026 | http://www.roca.com/products/soft-closing-seat-cover-toilet-801230..1?sku=A801230001