SENSUM

Shower kit. 3 functions, 110 mm hand-shower, 700 mm slide bar with adjustable hand-shower bracket and 1.70 m PVC shower flexible hose



COLOURS AND FINISHES

B0 Matt White

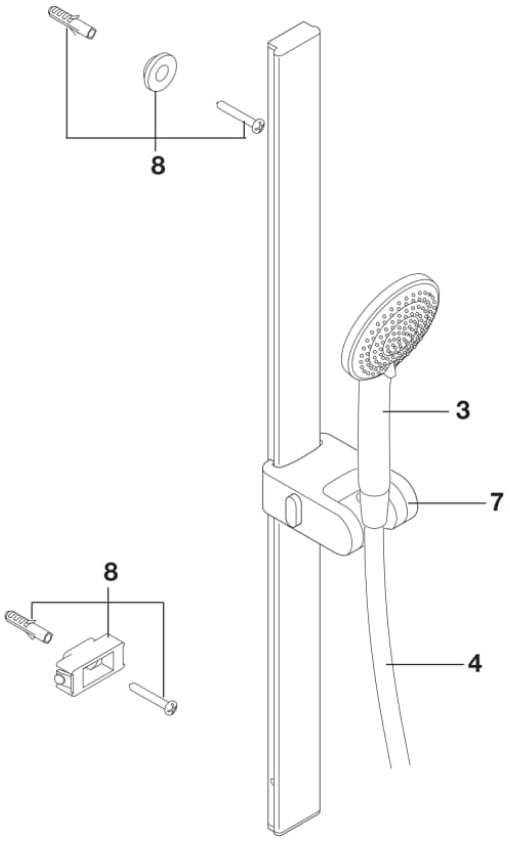

© Copyright 2026, Roca Sanitario, S.A. - All rights reserved | 21-11-2026 |
http://www.roca.com/products/shower-kit-3functions-110mm-hand-shower-700mm-slide-bar-adjustable-hand-shower-bracket-70m-pvc-shower-flexible-hose-5BGE09..0?sku=A5BGE09B00

Spareparts

Wall fixing set for sliding bar shower	AG02566B0R	8

© Copyright 2026, Roca Sanitario, S.A. - All rights reserved | 21-11-2026 |
http://www.roca.com/products/shower-kit-3functions-110mm-hand-shower-700mm-slide-bar-adjustable-hand-shower-bracket-70m-pvc-shower-flexible-hose-5BGE09..0?sku=A5BGE09B00