

SENSUM

Shower set. 3 functions, 110 mm hand-shower, adjustable hand-shower bracket and 1.70 m PVC shower flexible hose

MEASURES

Length	110 mm
Width	110 mm

COLOURS AND FINISHES

B0 Matt White

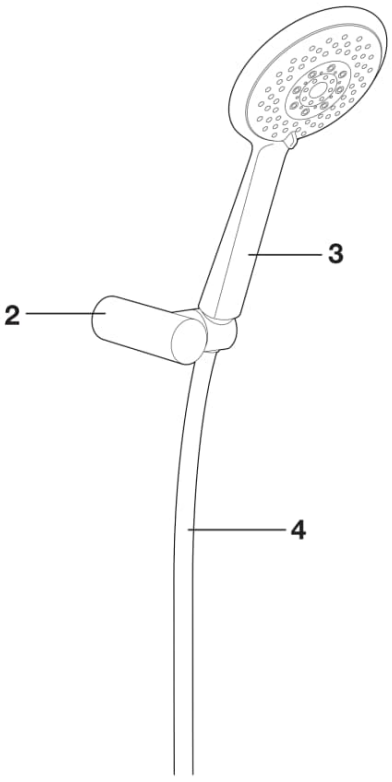

© Copyright 2026, Roca Sanitario, S.A. - All rights reserved | 26-11-2026 |
http://www.roca.com/products/shower-set-3functions-110mm-hand-shower-adjustable-hand-shower-bracket-70m-pvc-shower-flexible-hose-5BG309..0?sku=A5BG309B00

Spareparts

Wall fixed swivel bracket	AG0237600R	2	£27.30 PVPR (IVA excluded)

RECAMBIOS COMPATIBLES

Hand-shower with 3 functions	A5BG109B00	3	£52.80 PVPR (IVA excluded)

© Copyright 2026, Roca Sanitario, S.A. - All rights reserved | 26-11-2026 |
http://www.roca.com/products/shower-set-3functions-110mm-hand-shower-adjustable-hand-shower-bracket-70m-pvc-shower-flexible-hose-5BG309..0?sku=A5BG309B00