STELLA

Shower kit. Includes 100 mm hand-shower with 3 functions, 700 mm sliding bar and 1.70 m PVC anti-torsion flexible shower hose



COLOURS AND FINISHES

B0 White

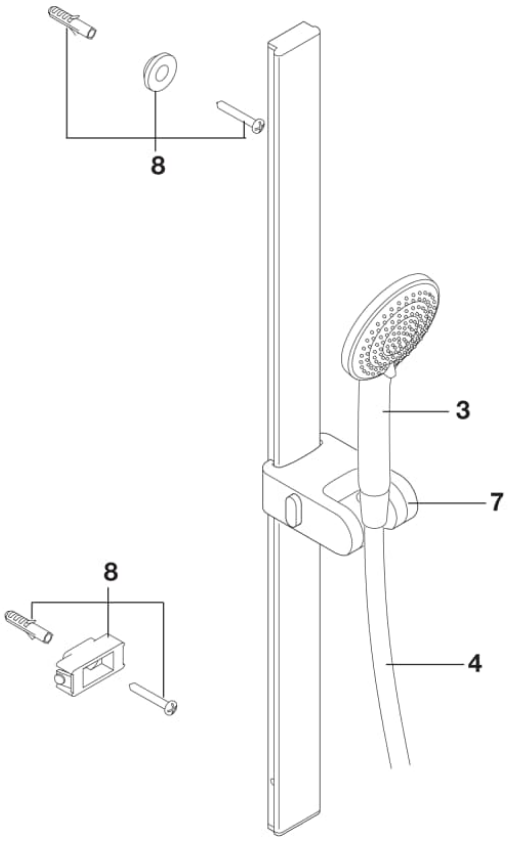

© Copyright 2026, Roca Sanitario, S.A. - All rights reserved | 23-11-2026 |
http://www.roca.com/products/shower-kit-includes-100mm-hand-shower-3functions-700mm-sliding-bar-70m-pvc-anti-torsion-flexible-shower-hose-5B8E13..0?sku=A5B8E13B00

Spareparts

Shower holder on sliding bar	AG02567B0R	7
Wall fixing set for sliding bar shower	AG02566B0R	8

© Copyright 2026, Roca Sanitario, S.A. - All rights reserved | 23-11-2026 |
http://www.roca.com/products/shower-kit-includes-100mm-hand-shower-3functions-700mm-sliding-bar-70m-pvc-anti-torsion-flexible-shower-hose-5B8E13..0?sku=A5B8E13B00