STELLA

Shower kit. Includes 100 mm hand-shower with 1 function, 700 mm sliding bar and 1.70 PVC anti-torsion flexible shower hose



COLOURS AND FINISHES

C0 Chrome

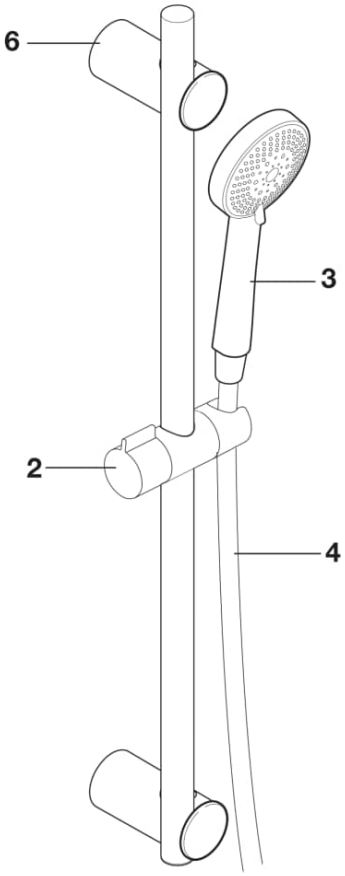

© Copyright 2026, Roca Sanitario, S.A. - All rights reserved | 23-11-2026 |
http://www.roca.com/products/shower-kit-includes-100mm-hand-shower-1function-700mm-sliding-bar-70pvc-anti-torsion-flexible-shower-hose-5B3413..0?sku=A5B3413C00

Spareparts

Wall fixing set for Ø36mm column	AG0242000R	6	£8.47 PVPR (IVA excluded)

Spareparts Allowed

Hand-shower with 1 function	A5B3113C00	3	£24.30 PVPR (IVA excluded)

© Copyright 2026, Roca Sanitario, S.A. - All rights reserved | 23-11-2026 |
http://www.roca.com/products/shower-kit-includes-100mm-hand-shower-1function-700mm-sliding-bar-70pvc-anti-torsion-flexible-shower-hose-5B3413..0?sku=A5B3413C00