SENSUM

Shower set. 1 function, 110 mm hand-shower, adjustable hand-shower bracket and 1.70 m PVC shower flexible hose



COLOURS AND FINISHES

C0 Chrome

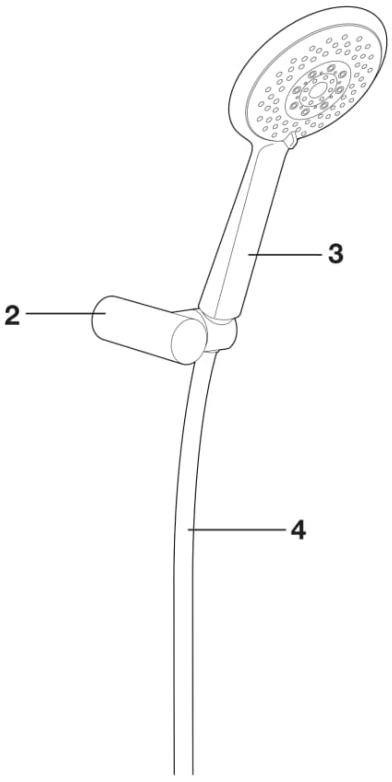

© Copyright 2026, Roca Sanitario, S.A. - All rights reserved | 25-11-2026 |
http://www.roca.com/products/shower-set-1function-110mm-hand-shower-adjustable-hand-shower-bracket-70m-pvc-shower-flexible-hose-5B3309..0?sku=A5B3309C00

Spareparts

Wall fixed swivel bracket	AG0237600R	2	£27.30 PVPR (IVA excluded)

© Copyright 2026, Roca Sanitario, S.A. - All rights reserved | 25-11-2026 |
http://www.roca.com/products/shower-set-1function-110mm-hand-shower-adjustable-hand-shower-bracket-70m-pvc-shower-flexible-hose-5B3309..0?sku=A5B3309C00