WALL

Wall arm for shower head



MEASURES

Length 300 mm

Height 75 mm

COLOURS AND FINISHES

C0 Chrome

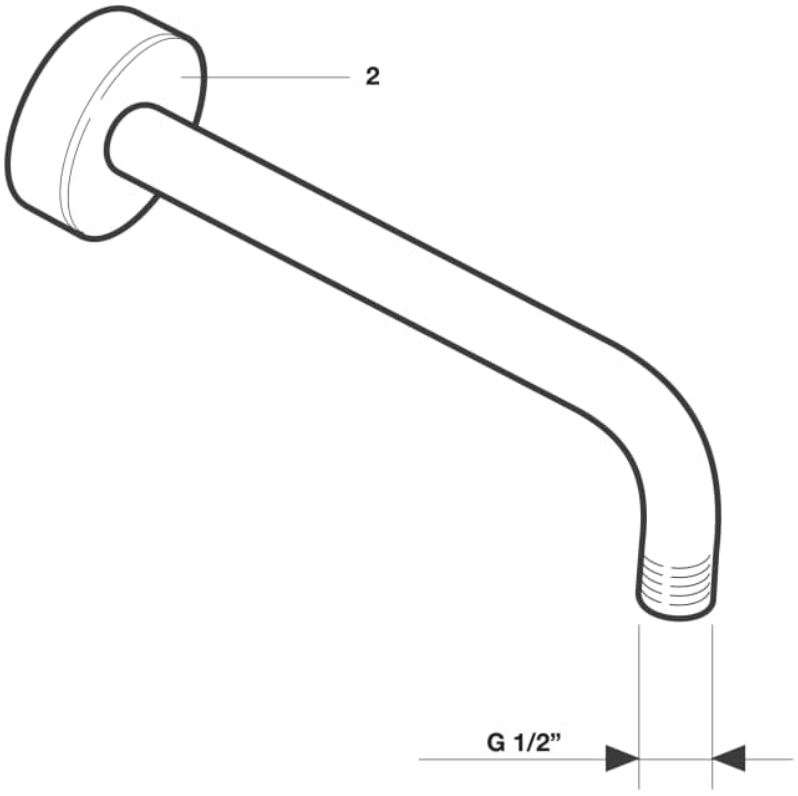

© Copyright 2026, Roca Sanitario, S.A. - All rights reserved | 23-11-2026 | http://www.roca.com/products/wall-arm-shower-head-5B0150C00?sku=A5B0150C00

Spareparts

55x20mm 1-hole escutcheon for tap	AG0266400R	2

© Copyright 2026, Roca Sanitario, S.A. - All rights reserved | 23-11-2026 | http://www.roca.com/products/wall-arm-shower-head-5B0150C00?sku=A5B0150C00