

INDEX-T SWITCH

Thermostatic shower column with shelf

COLOURS AND FINISHES

C0 Chrome

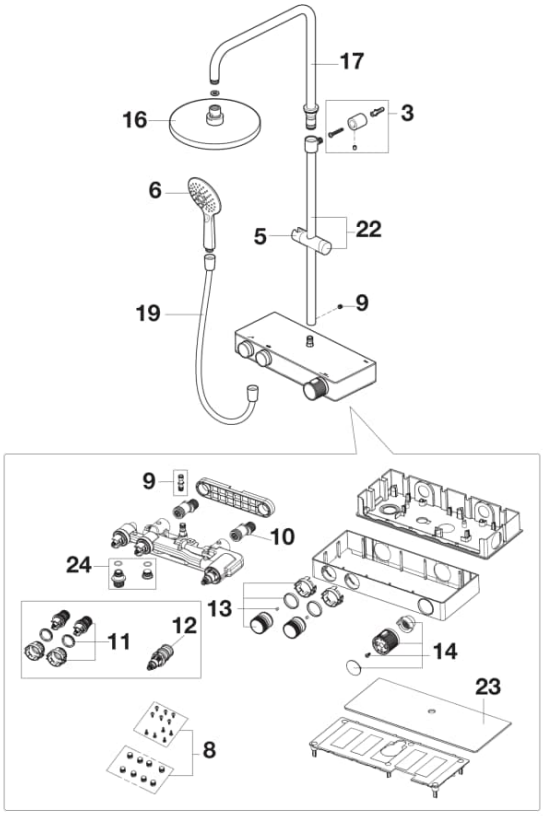

© Copyright 2026, Roca Sanitario, S.A. - All rights reserved | 28-11-2026 |
http://www.roca.com/products/thermostatic-shower-column-shelf-5A9I09..0?sku=A5A9I09C00

Spareparts

Fixing accesories for column	AG0242400R	3		£6.71 PVPR (IVA excluded)
Round shower support kit	AG0244400R	5		£10.90 PVPR (IVA excluded)
Screws and stoppers	AG0242700R	8		£7.82 PVPR (IVA excluded)
Tap column connector kit	AG0242800R	9		£3.79 PVPR (IVA excluded)
Column eccentric kit	AG0242900R	10	2 ut	£9.88 PVPR (IVA excluded)
Inverter cartridge and bushing kit	AG0243000R	11		£11.90 PVPR (IVA excluded)
Thermostatic cartridge kit	AG0243100R	12		£70.90 PVPR (IVA excluded)
Flow control handles for shower faucets Index-T Switch	AG0243200R	13		£3.61 PVPR (IVA excluded)
Temperature control handles for shower faucets Index-T Switch	AG0243300R	14		£5.00 PVPR (IVA excluded)
Upper column pipe kit	AG0243600R	17		
2-way column lower pipe kit	AG0244100R	22		
2-way top plate kit for Index-T switch taps	AG0244200R	23		
Column connection kit	AG0244300R	24		£10.20 PVPR (IVA excluded)

RECAMBIOS COMPATIBLES

Round adjustable ABS shower head for wall or ceiling installation in chrome	A5B2150C00	16	200 mm	£67.60 PVPR (IVA excluded)

© Copyright 2026, Roca Sanitario, S.A. - All rights reserved | 28-11-2026 |
http://www.roca.com/products/thermostatic-shower-column-shelf-5A9I09..0?sku=A5A9I09C00