ALOA

In countertop basin



MEASURES

Length	560 mm
Width	475 mm
Height	190 mm

COLOURS AND FINISHES

00 White

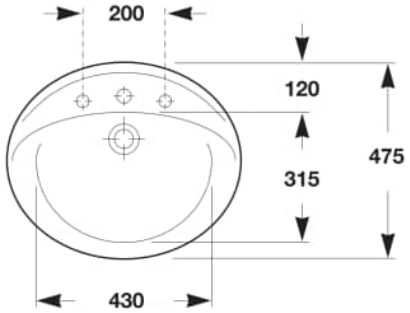

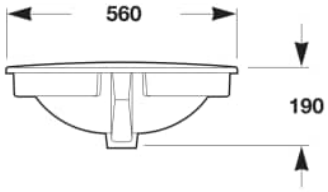

ADMITE (no incluido)

1	2	3/4	5/6	7
			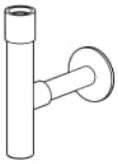	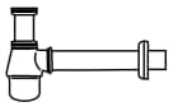

© Copyright 2026, Roca Sanitario, S.A. - All rights reserved | 28-11-2026 | http://www.roca.com/products/countertop-basin-327865..0?sku=A327865000

Spareparts Allowed

Click-clack universal waste. Ø 65 chrome plug	A505400900	2	Click-clack Ø40
Click-clack universal waste. Ø 65 chrome plug	A505401000	3	Click-clack Ø65

© Copyright 2026, Roca Sanitario, S.A. - All rights reserved | 28-11-2026 | http://www.roca.com/products/countertop-basin-327865..0?sku=A327865000