

INSPIRA

Round - Over countertop Fineceramic® basin

MEASURES

Length	500 mm
Width	370 mm
Height	140 mm

COLOURS AND FINISHES

00 White

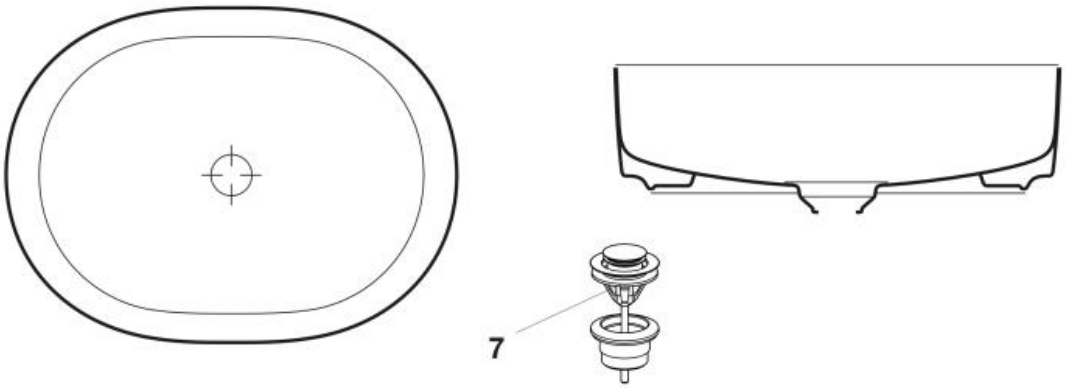

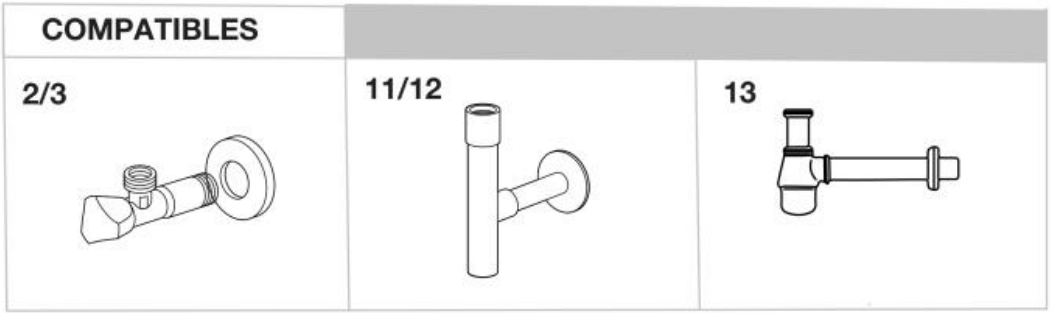

© Copyright 2026, Roca Sanitario, S.A. - All rights reserved | 28-11-2026 |
http://www.roca.com/products/round-countertop-fineceramic-basin-327520..0?sku=A327520000