DIVERTA

# Semi-recessed basin



MEASURES

| | |
|---|---|
| Length | 500 mm |
| Width | 450 mm |
| Height | 165 mm |

COLOURS AND FINISHES

00 White

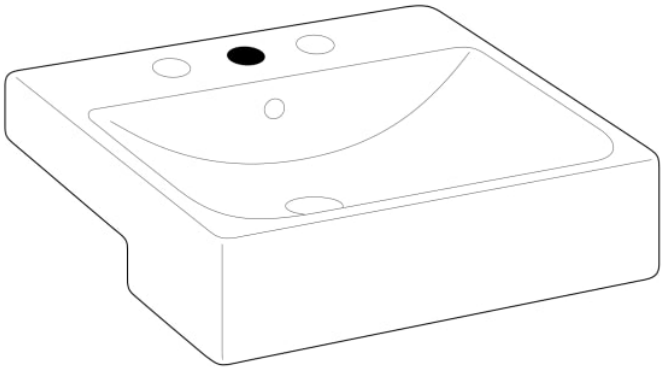

| ADMITE (no incluido) | | | |
|---|---|---|---|
| 1 | 2/3/4 | 5 | 6 |
|  |  | 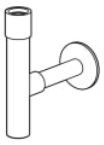 | 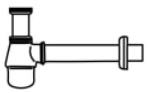 |

© Copyright 2026, Roca Sanitario, S.A. - All rights reserved | 28-11-2026 | http://www.roca.com/products/semi-recessed-basin-32711S..0?sku=A32711S000

## Spareparts Allowed

| | | | |
|---|---|---|---|
| Click-clack universal waste. Ø 65 chrome plug | A505400900 | 2 | Click-clack Ø40 |
| Click-clack universal waste. Ø 65 chrome plug | A505401000 | 3 | Click-clack Ø65 |

© Copyright 2026, Roca Sanitario, S.A. - All rights reserved | 28-11-2026 | http://www.roca.com/products/semi-recessed-basin-32711S..0?sku=A32711S000