THE GAP

# Round - Over countertop basin



MEASURES

| | |
|---|---|
| Length | 400 mm |
| Width | 400 mm |
| Height | 130 mm |

COLOURS AND FINISHES

00 White

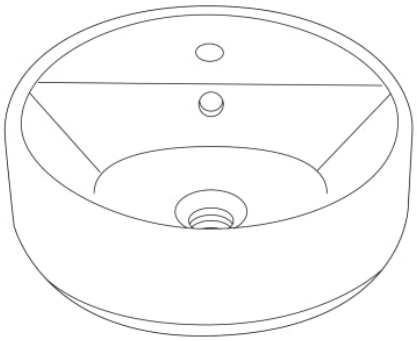

PRODUCTOS COMPATIBLES

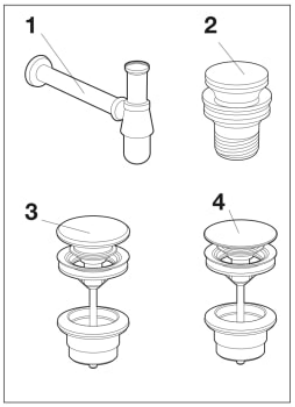


© Copyright 2026, Roca Sanitario, S.A. - All rights reserved | 28-11-2026 | http://www.roca.com/products/round-countertop-basin-3270MK..0?sku=A3270MK000

## Spareparts Allowed

| | | | |
|---|---|---|---|
| Click-clack universal waste. Ø 65 chrome plug | A505401000 | 4 | Click-clack Ø65 |

© Copyright 2026, Roca Sanitario, S.A. - All rights reserved | 28-11-2026 | http://www.roca.com/products/round-countertop-basin-3270MK..0?sku=A3270MK000