

MECHANISMS

Short button for D1P flush mechanism

PVPR (IVA INCLUIDO)

13 ,60 €

FEATURES

Short description: Tank cover Ø40 mm

© Copyright 2026, Roca Sanitario, S.A. - All rights reserved | 27-11-2026 |
http://www.roca.com/products/short-button-d1p-flush-mechanism-H0005000R?sku=AH0005000R

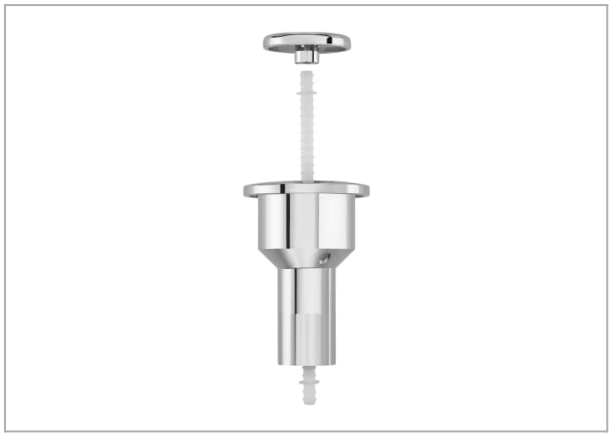

Mechanisms

Roca Universal Mechanisms are fully compatible with Roca cisterns and guarantee the perfect functioning of the toilet as well as offer different water saving options.



© Copyright 2026, Roca Sanitario, S.A. - All rights reserved | 27-11-2026 |
http://www.roca.com/products/short-button-d1p-flush-mechanism-H0005000R?sku=AH0005000R