Ura

L4-E + LF-C

AM20L...
AM20K...

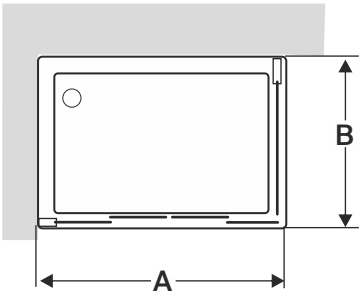

L4-E	A	
	min	m x.
1600	1520	1620
1700	1621	1720
1800	1721	1820
1900	1821	1920
2000	1921	2020

LF-C	B	
	min	m x.
700	685	710
750	735	760
800	785	810
900	885	910

Roca

L4-E

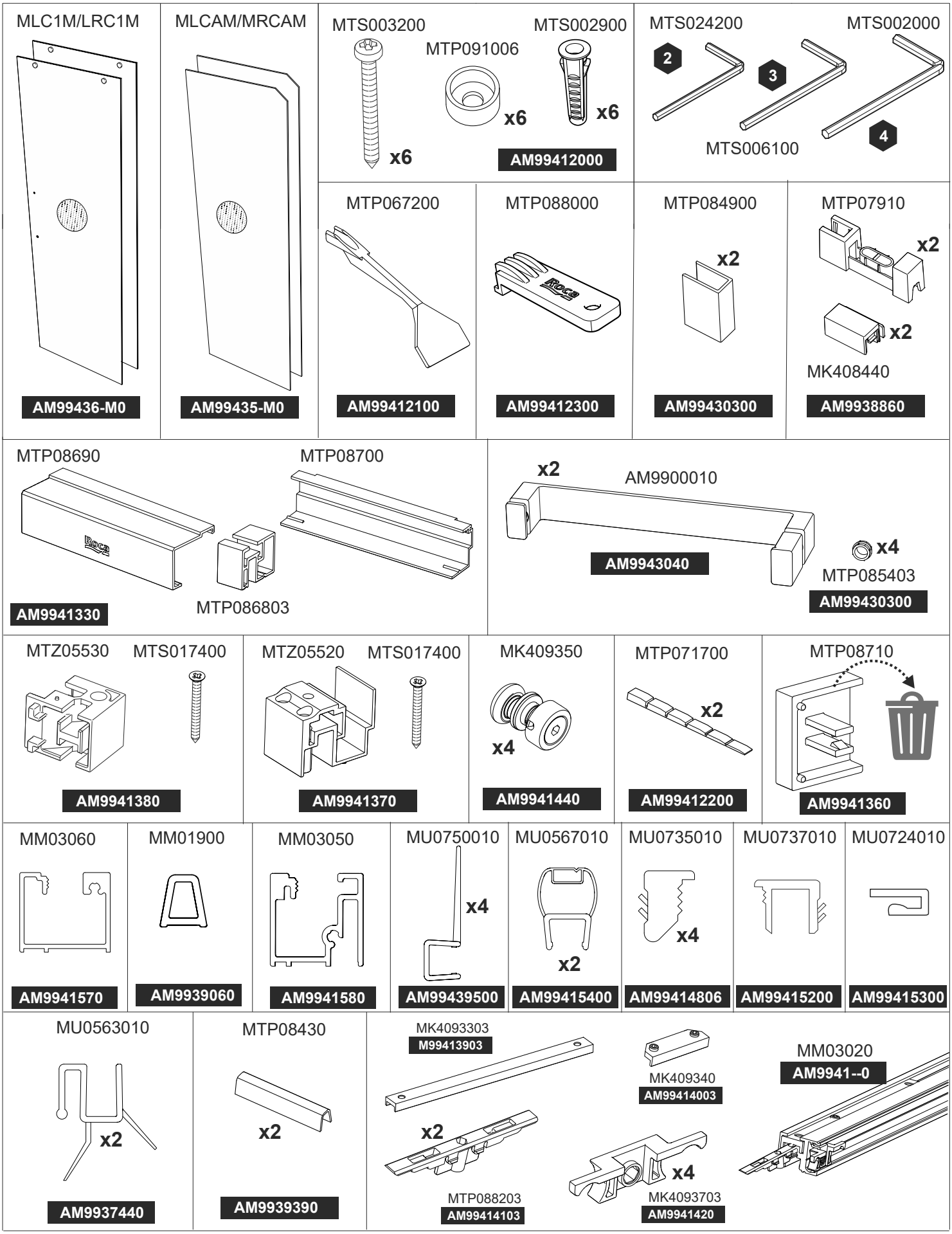
MLC1M/LRC1M
AM99436-M0
MLCAM/MRCAM
AM99435-M0
MTS003200
x6
MTP091006
x6
MTS002900
x6
AM99412000
MTS024200
2
3
4
MTS002000
MTS006100
MTP067200
AM99412100
MTP088000
AM99412300
MTP084900
x2
AM99430300
MTP07910
x2
x2
MK408440
AM9938860
MTP08690
MTP08700
MTP086803
AM9941330
x2
AM9900010
AM9943040
x4
MTP085403
AM99430300
MTZ05530
MTS017400
AM9941380
MTZ05520
MTS017400
AM9941370
MK409350
x4
AM9941440
MTP071700
x2
AM99412200
MTP08710
AM9941360
MM03060
AM9941570
MM01900
AM9939060
MM03050
AM9941580
MU0750010
x4
AM99439500
MU0567010
x2
AM99415400
MU0735010
x4
AM99414806
MU0737010
AM99415200
MU0724010
AM99415300
MU0563010
x2
AM9937440
MTP08430
x2
AM9939390
MK4093303
M99413903
x2
MTP088203
AM99414103
MK409340
AM99414003
x4
MK4093703
AM9941420
MM03020
AM9941--0

LF-C

MABKM

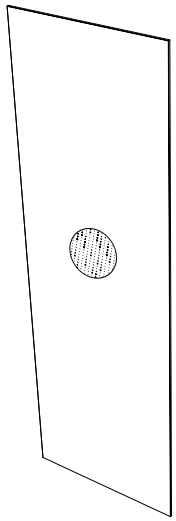

AM99424-M0

MTS001300

AM99348000

MTP087203

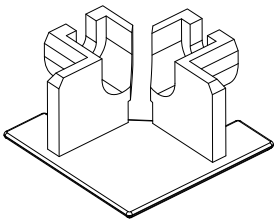

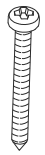

MTS001000

AM99412803

MTP087300

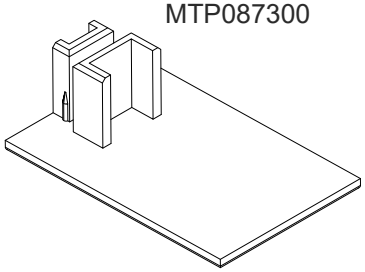

AM99413500

MU0735010

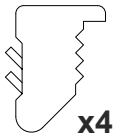

AM99414806

MP0318010

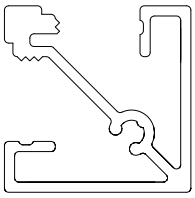

AM9941600

MP0320010

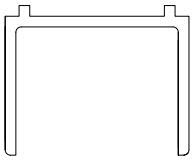

AM9941610

MM03070

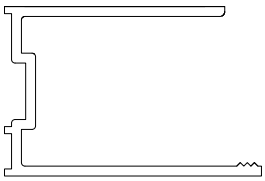

AM9941590

MM0304R

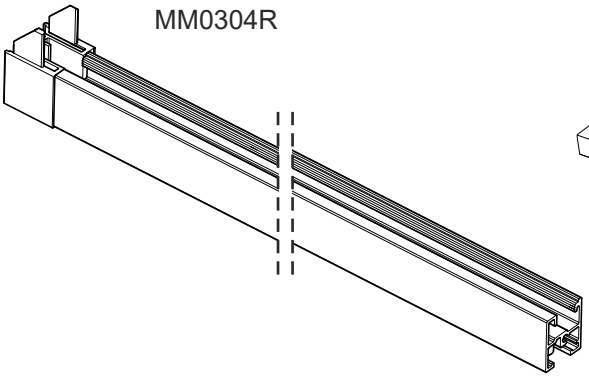

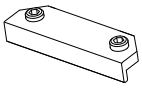

MK409340

AM99414003

MTP08670

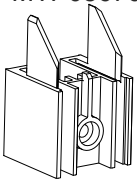

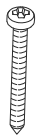

MTS001000

AM9941260

AM99418–

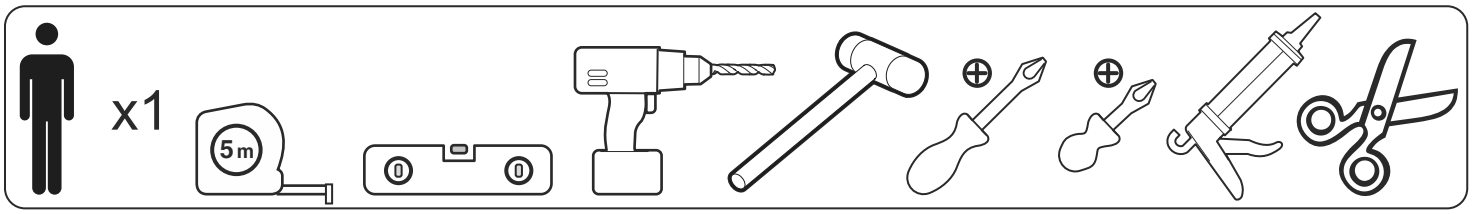

1

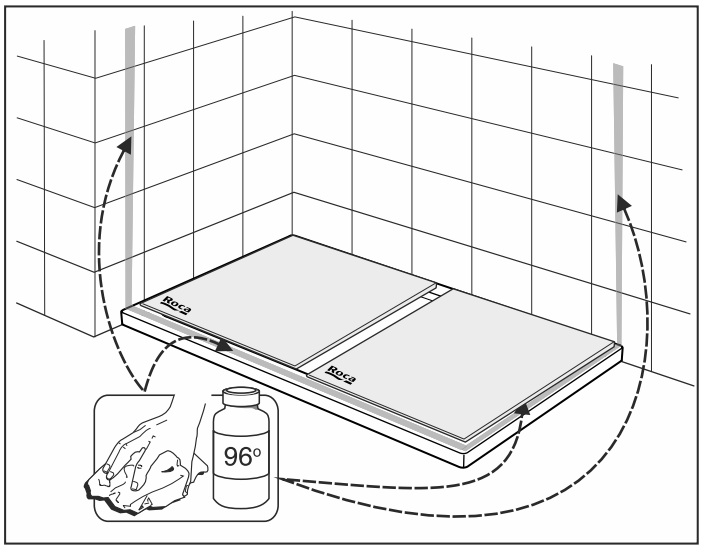

2

L4-E	A min	A m x.
1600	1520	1620
1700	1621	1720
1800	1721	1820
1900	1821	1920
2000	1921	2020

LF-C	B (mm) min	B (mm) m x.
700	685	710
750	735	760
800	785	810
900	885	910

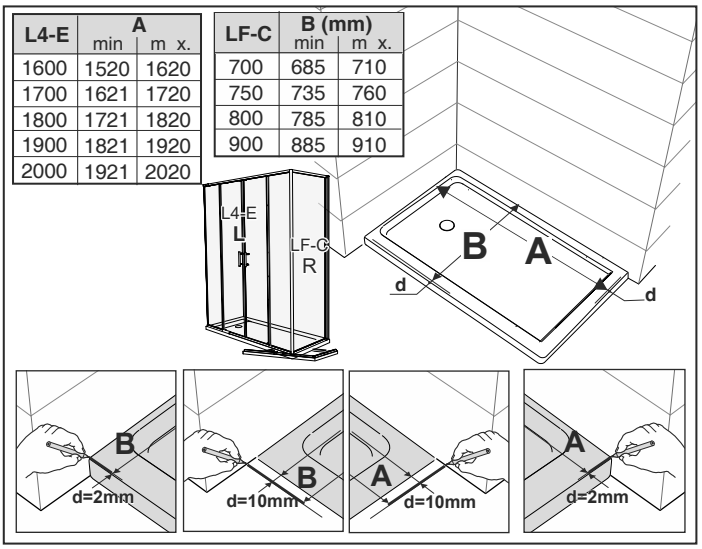

3

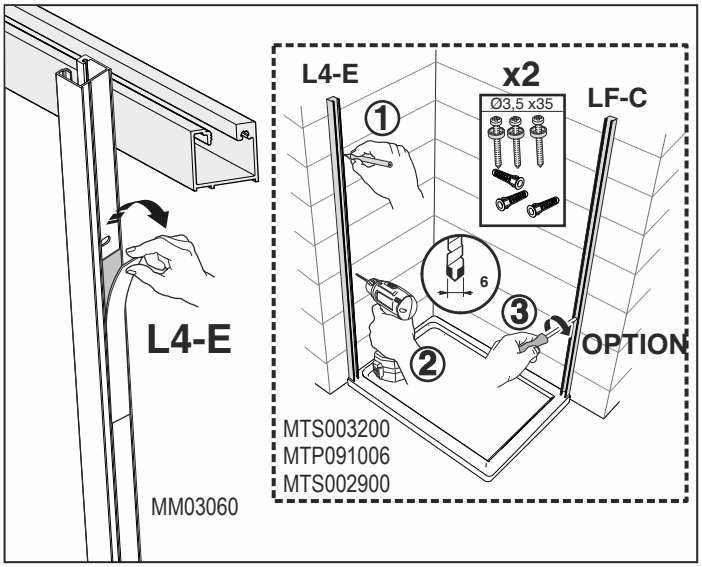

4

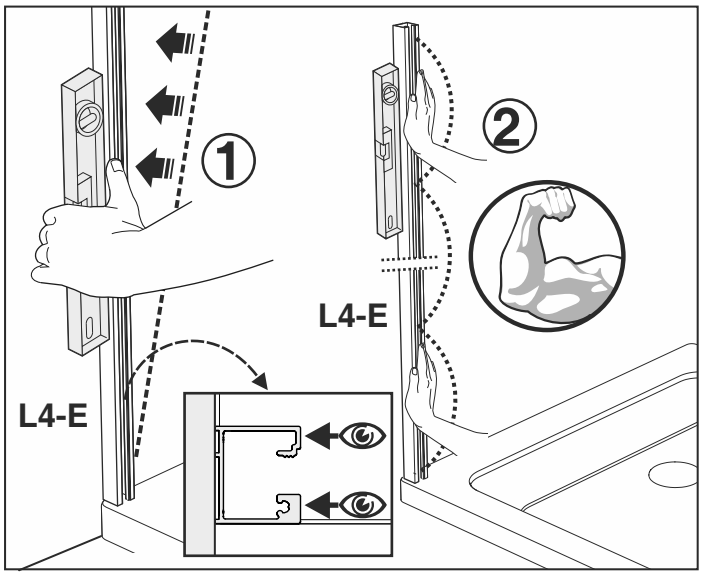

5

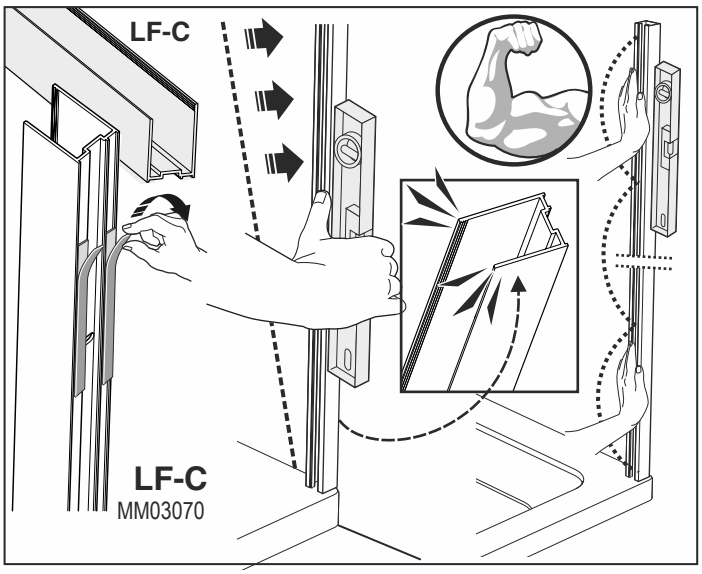

6

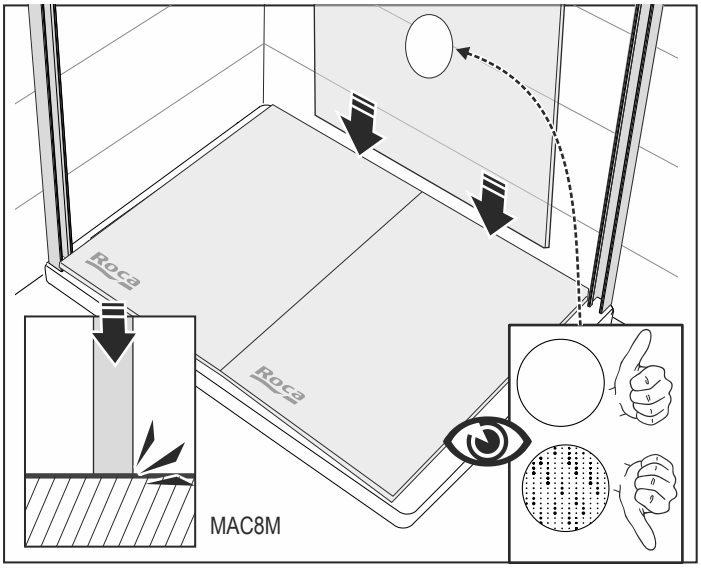

7

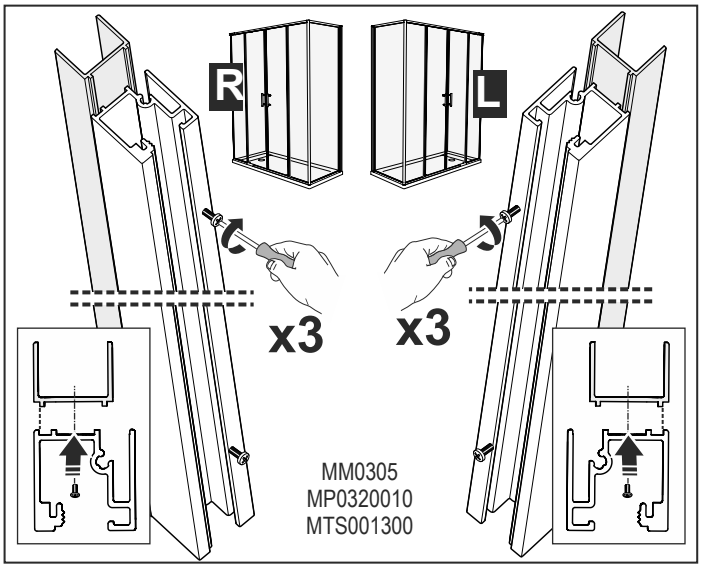
R
L
x3
x3
MM0305
MP0320010
MTS001300

8

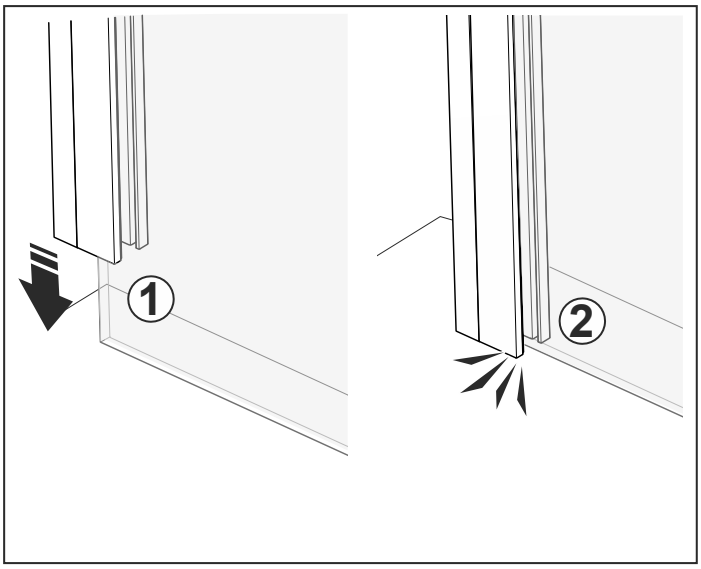
1
2

9

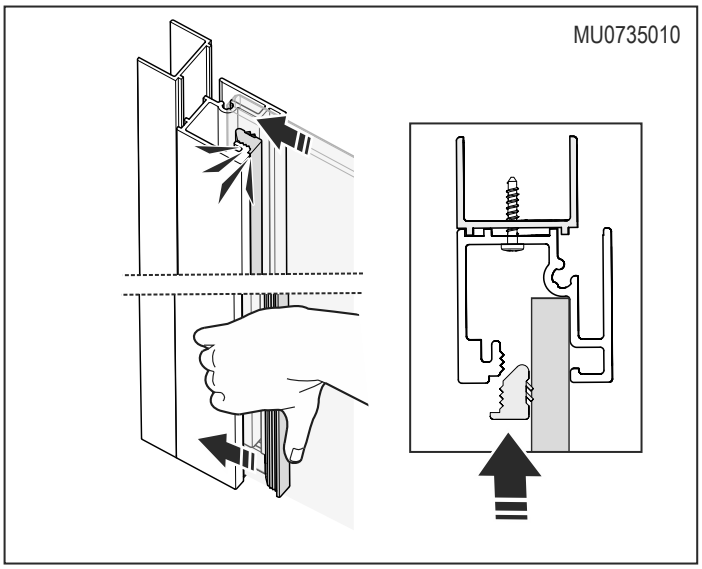
MU0735010

10

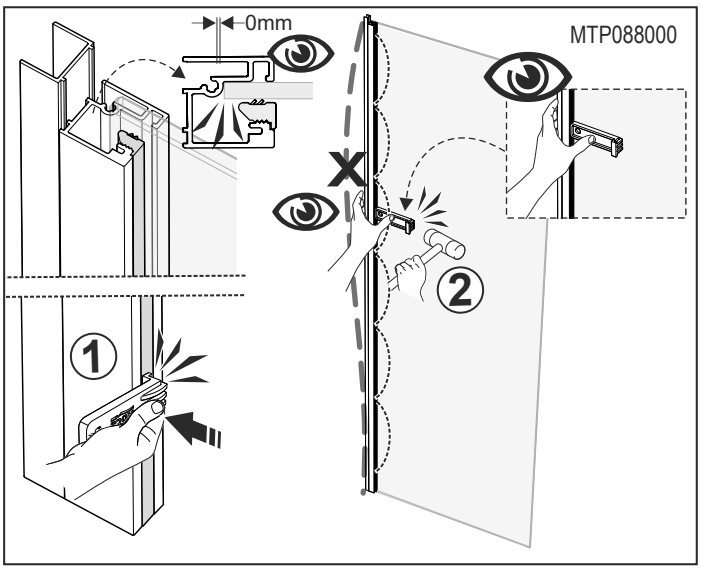
0mm
MTP088000
1
2

11

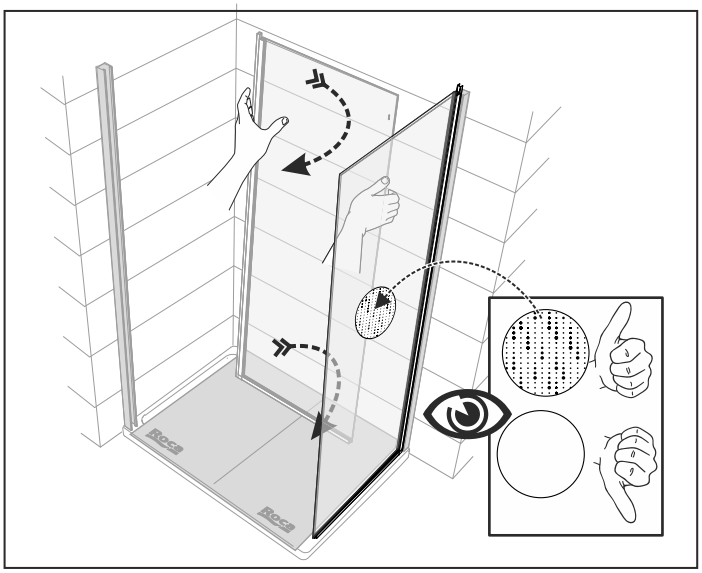

12

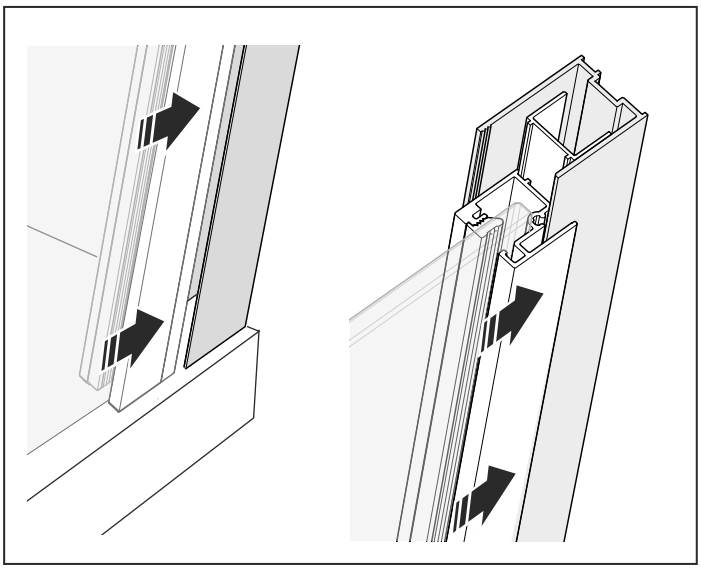

13

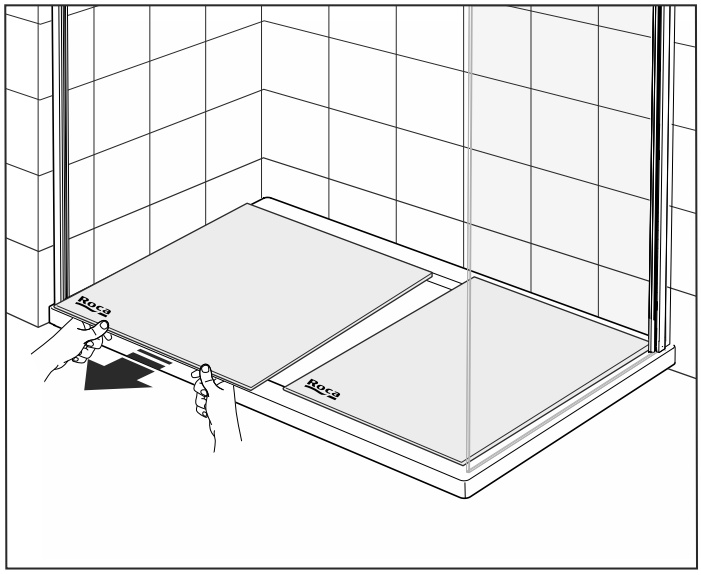

14

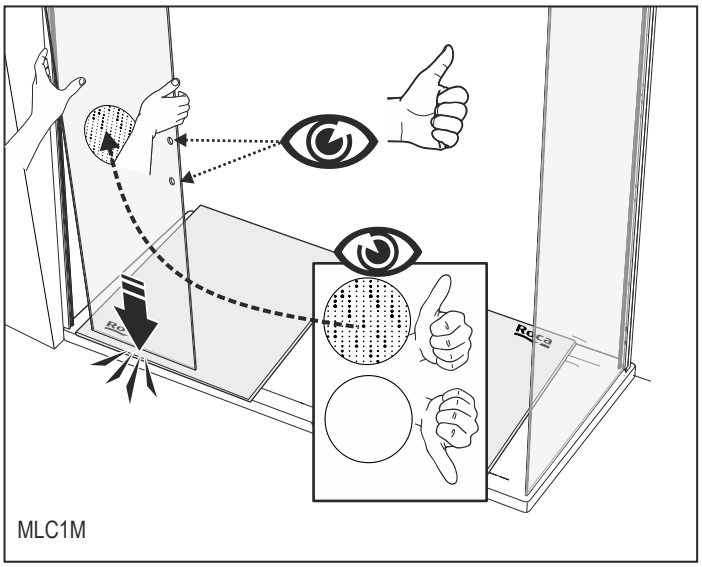

15

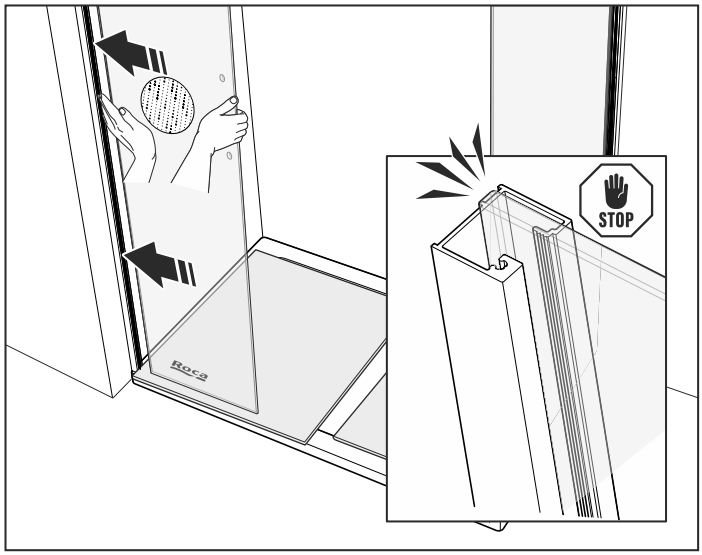

16

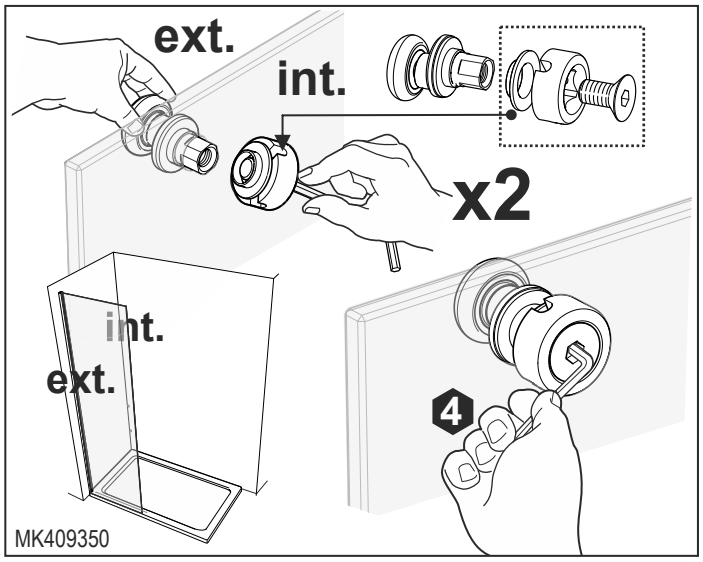

17

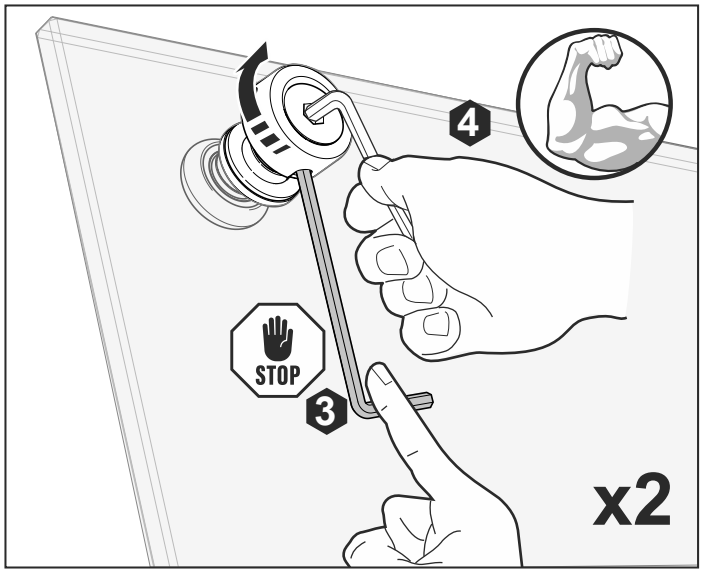

18

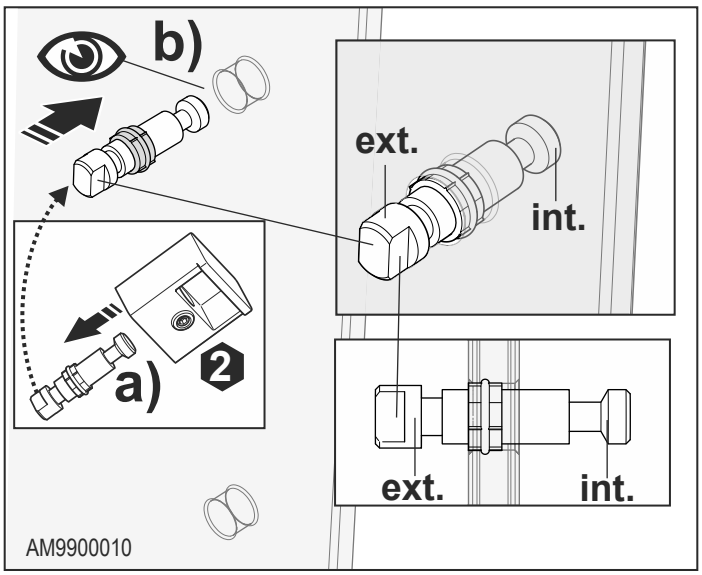

19

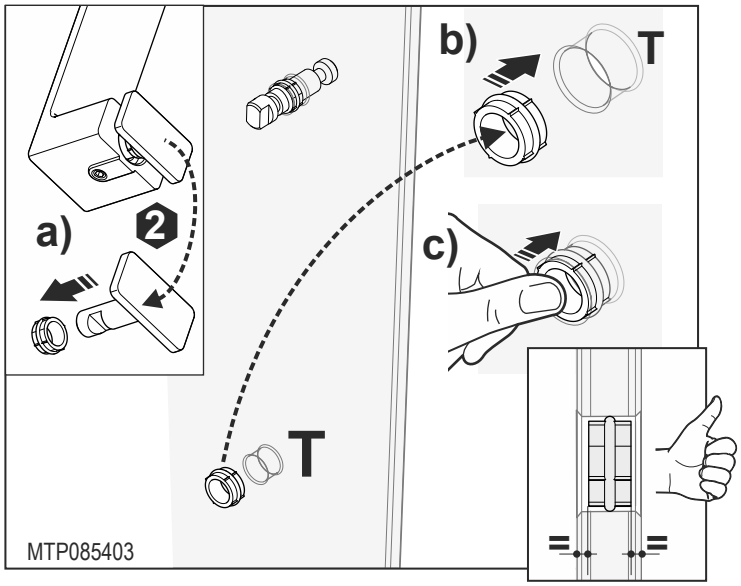

20

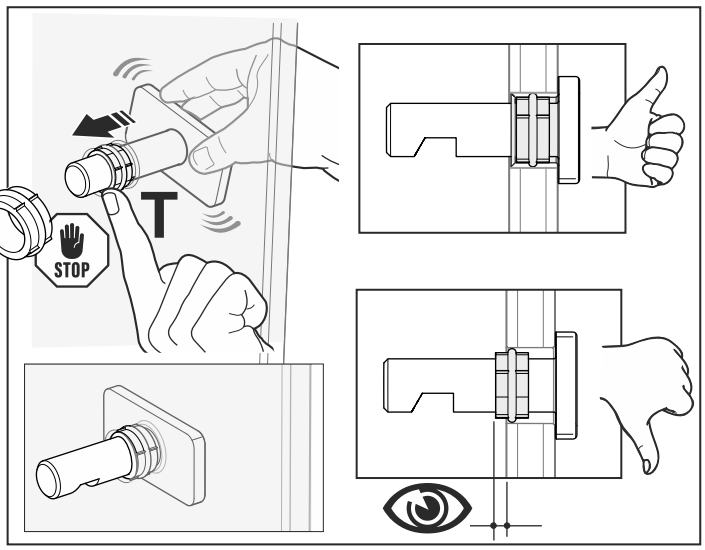

21

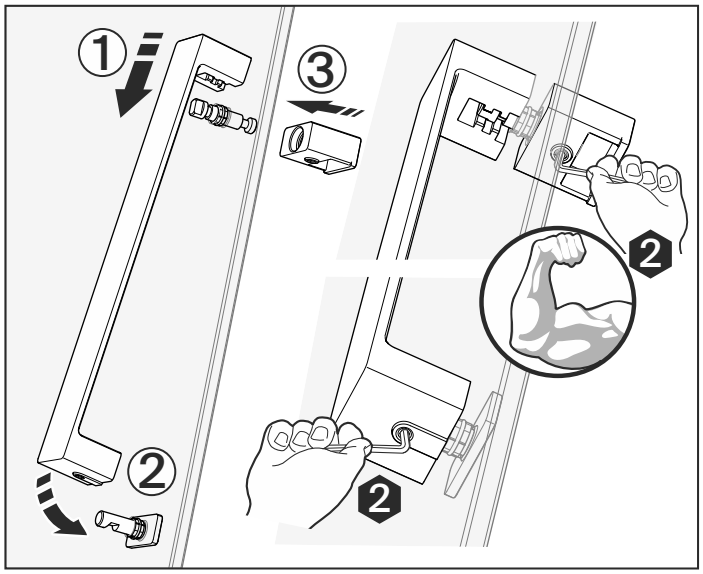

22

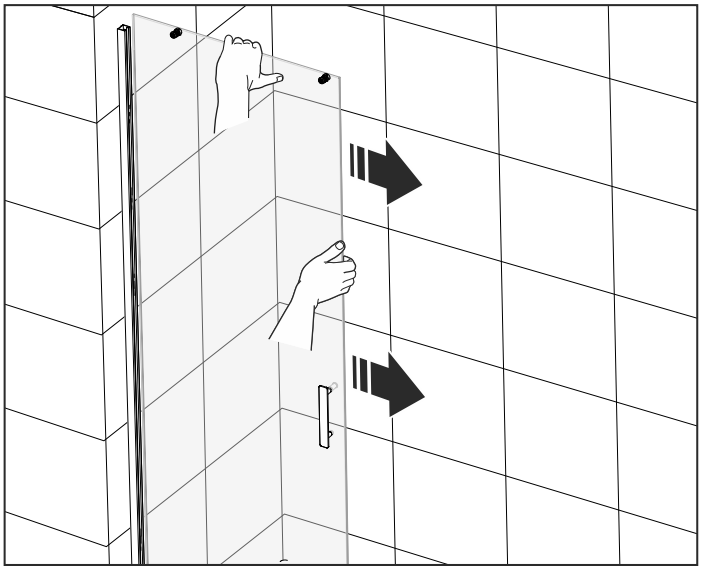

23

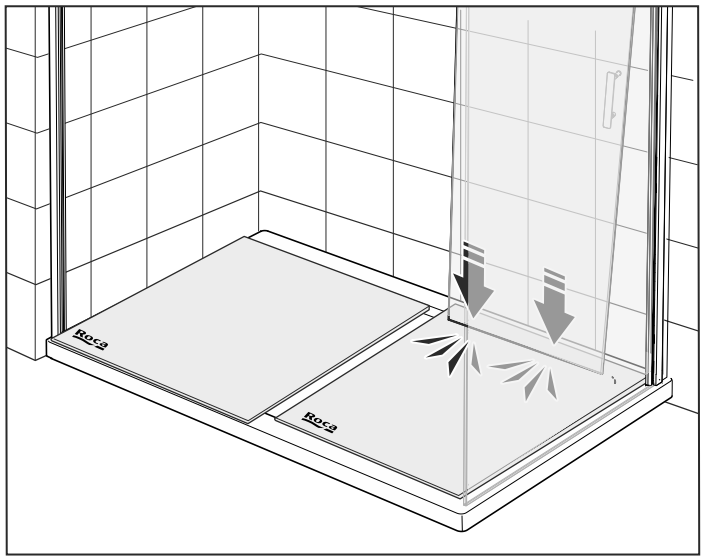

24

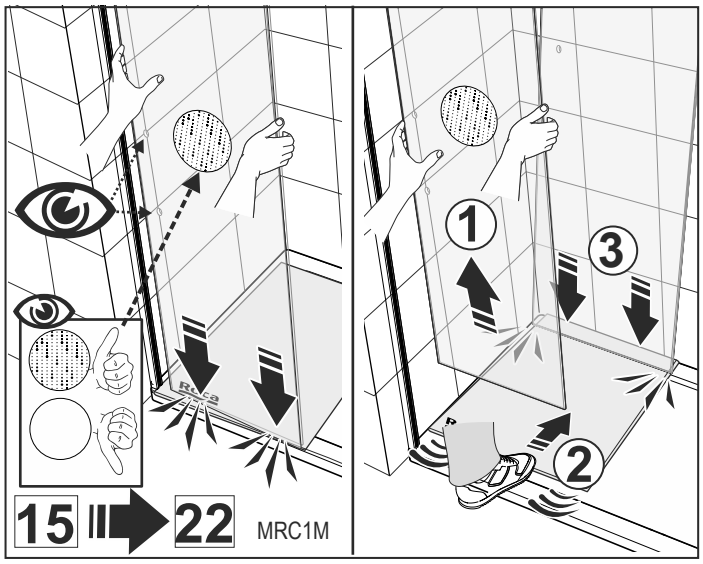

25

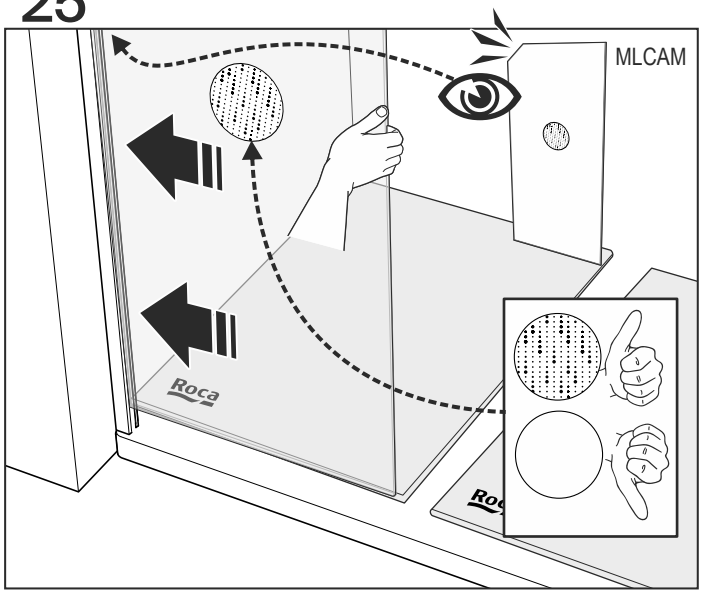

26

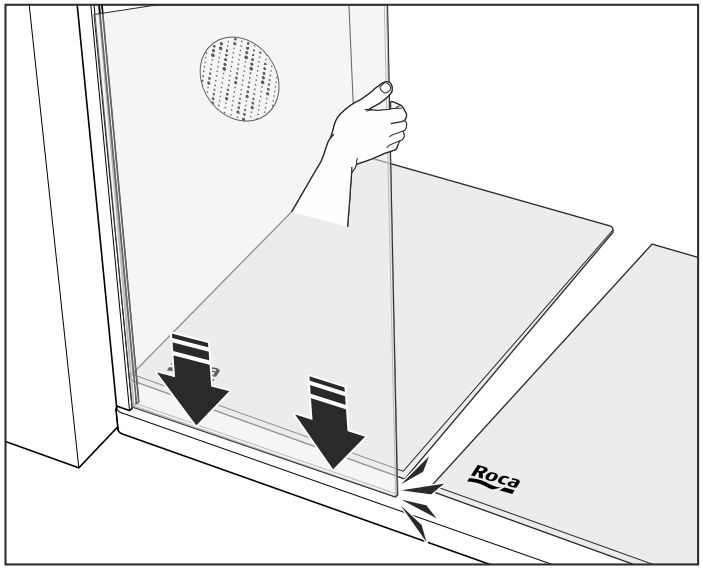

27

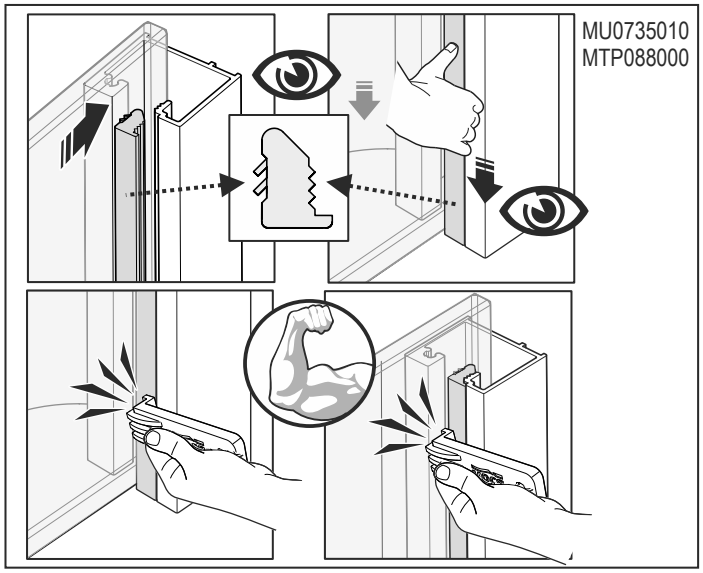

28

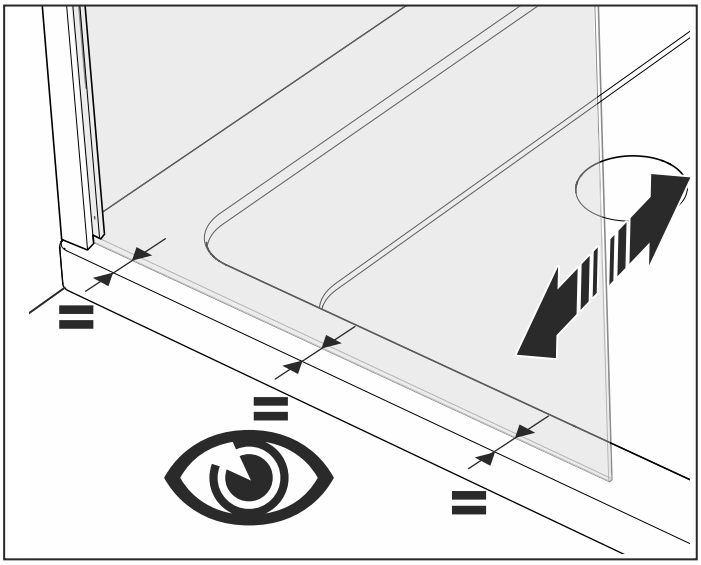

29

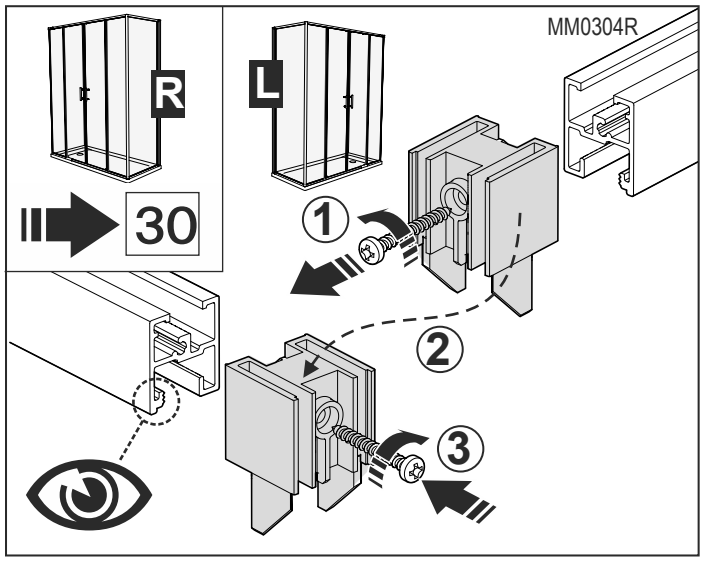

30

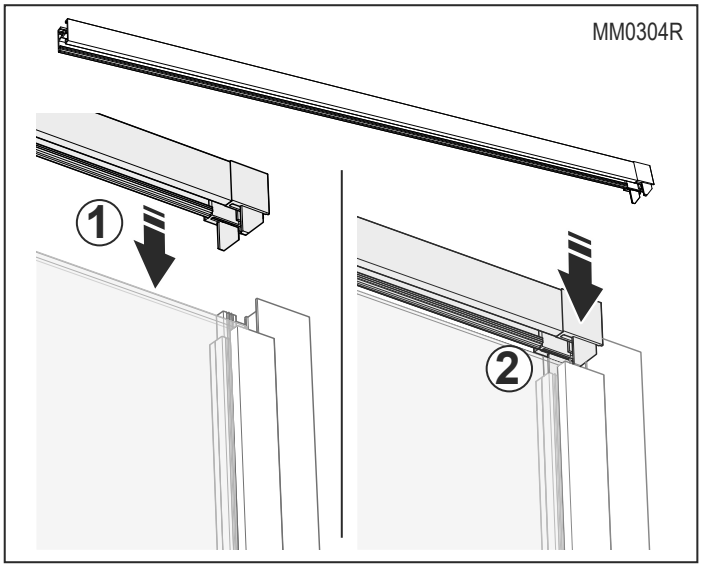

31

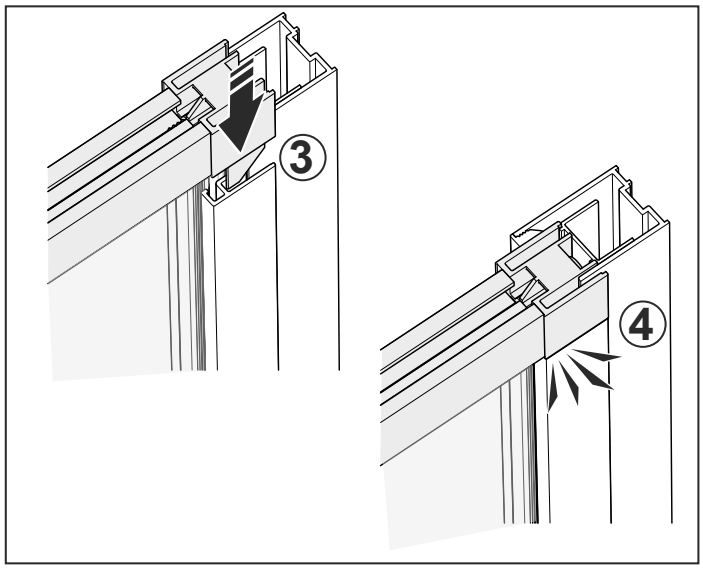

32

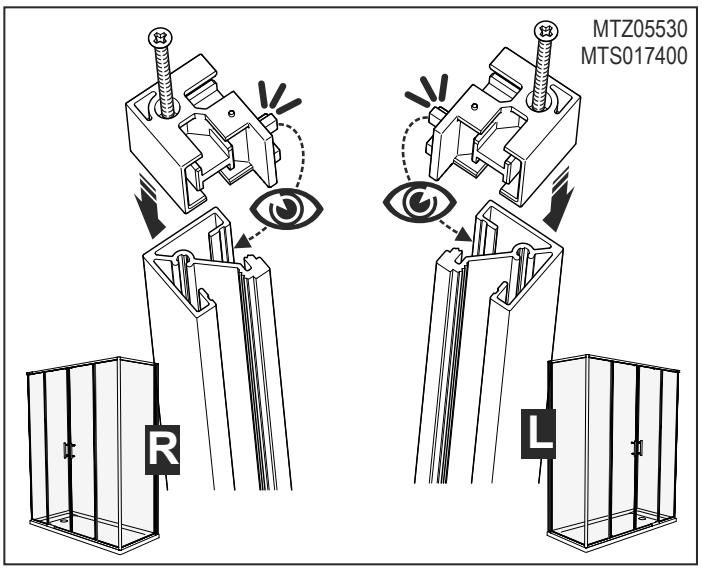

33

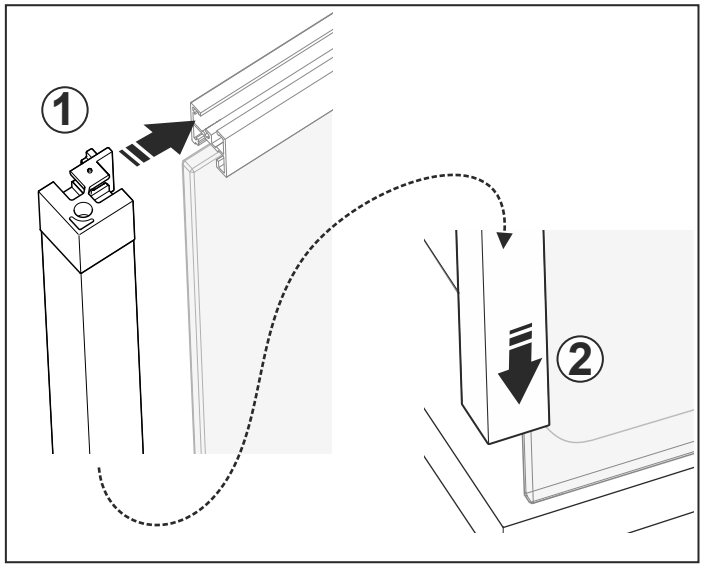

34

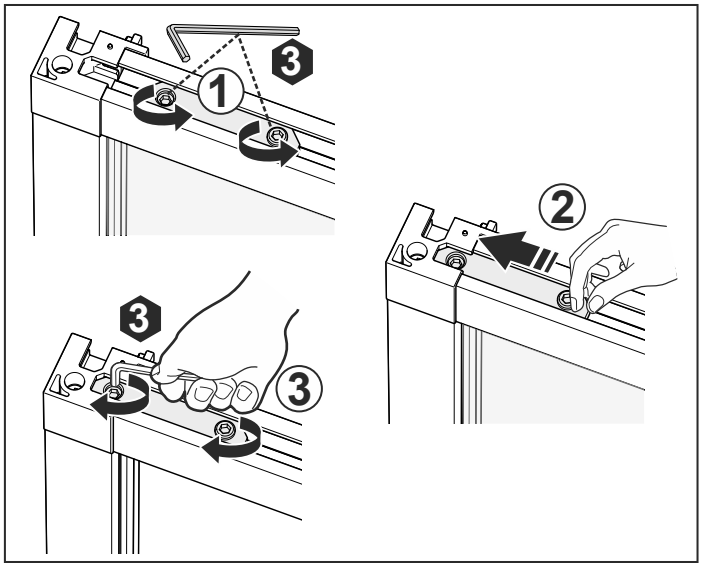

35

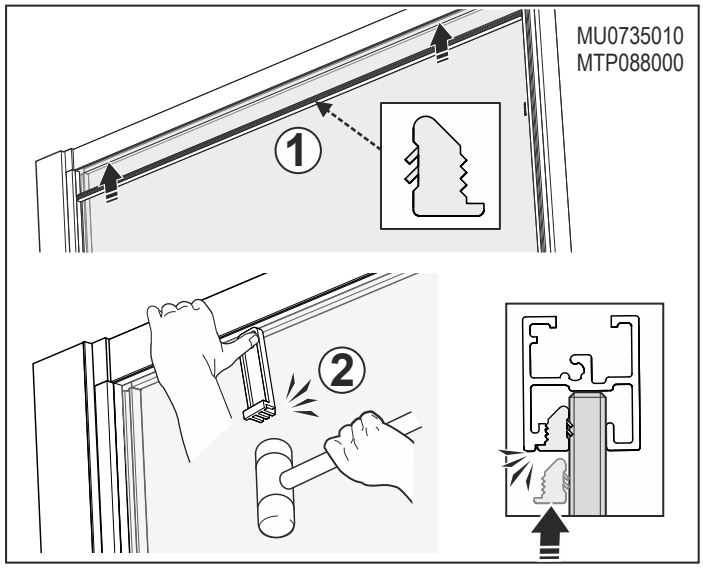

36

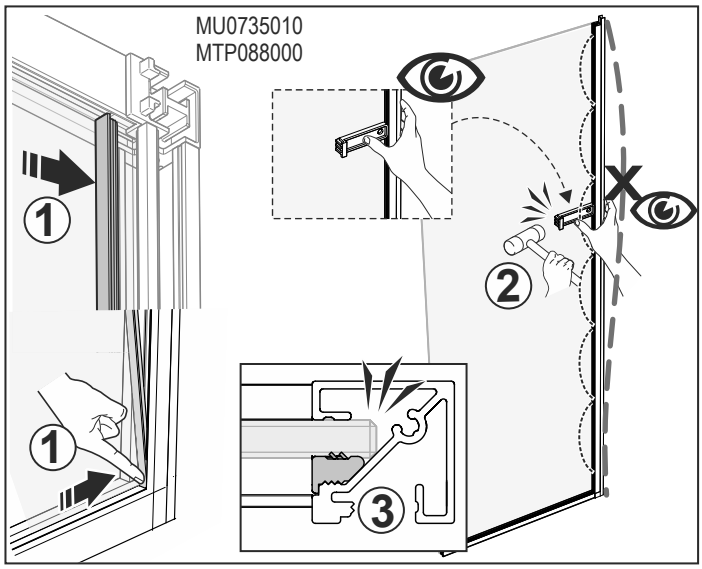

37

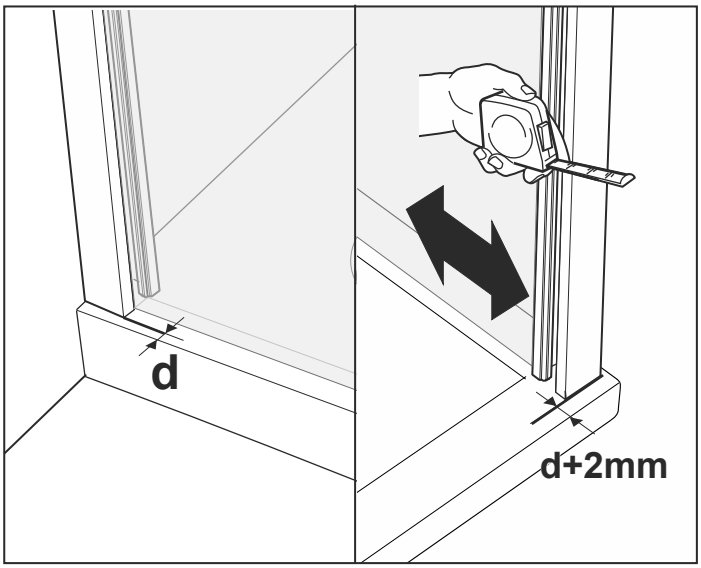

38

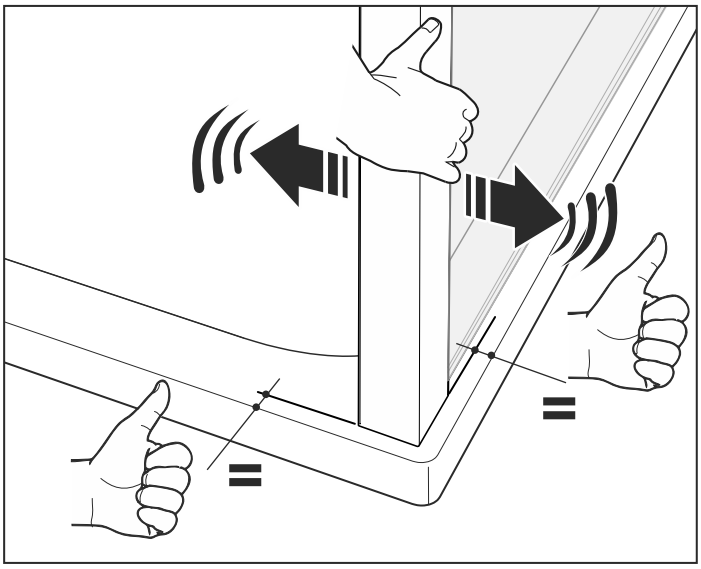

39

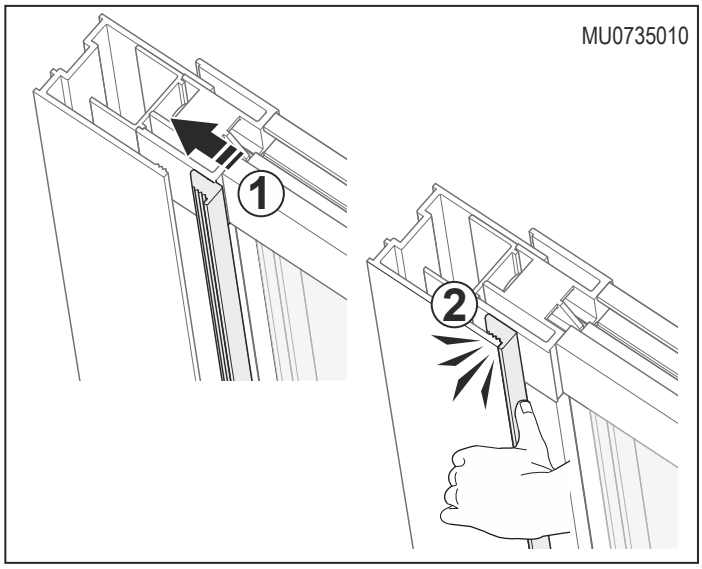

40

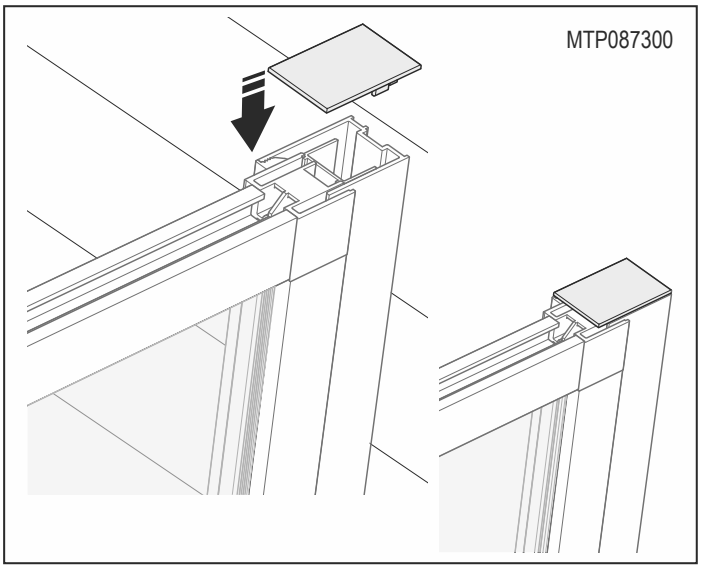

41

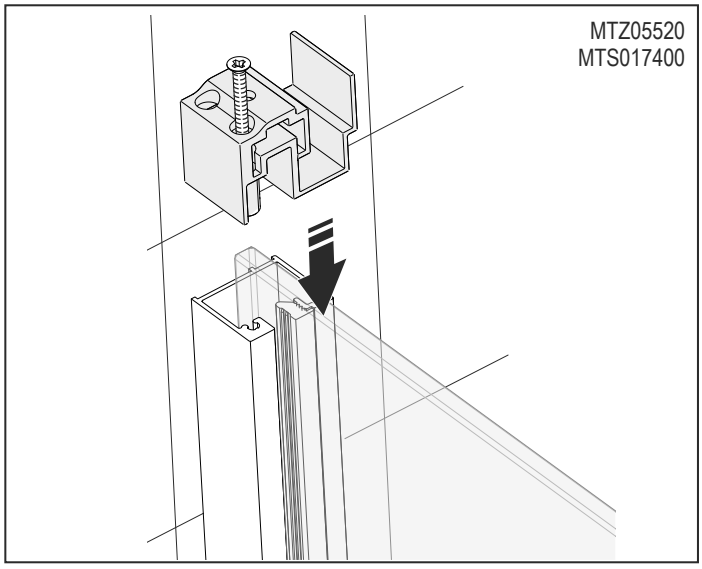

42

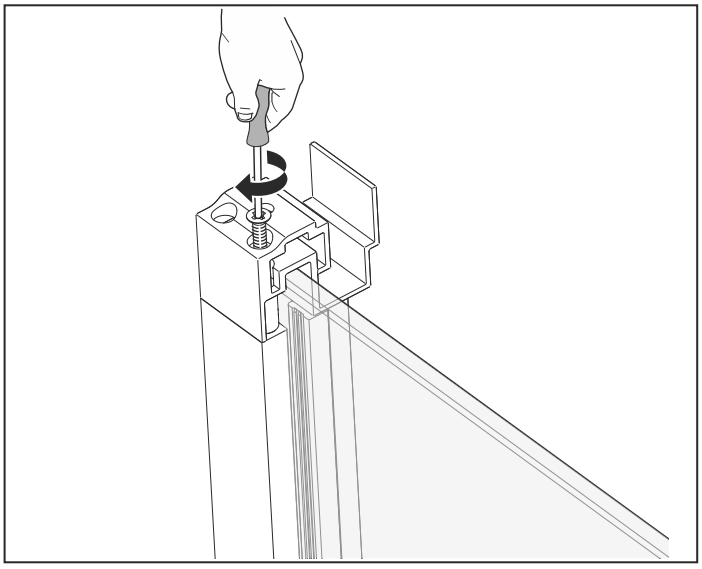

43

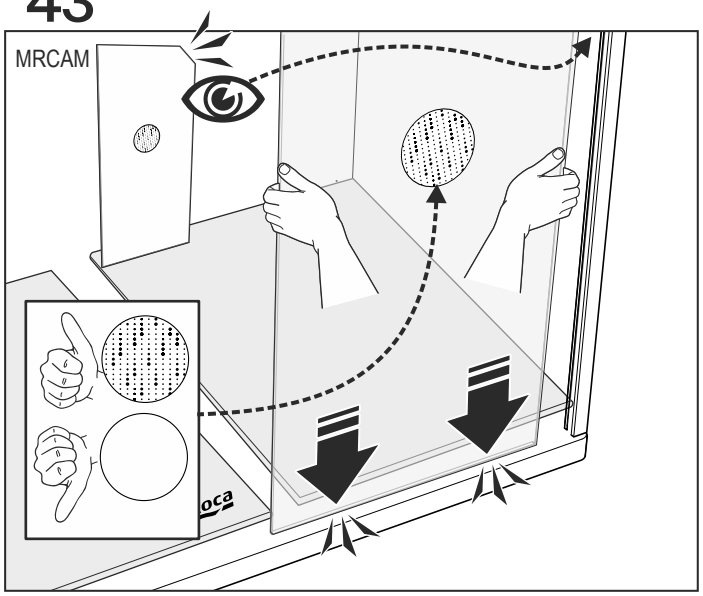

44

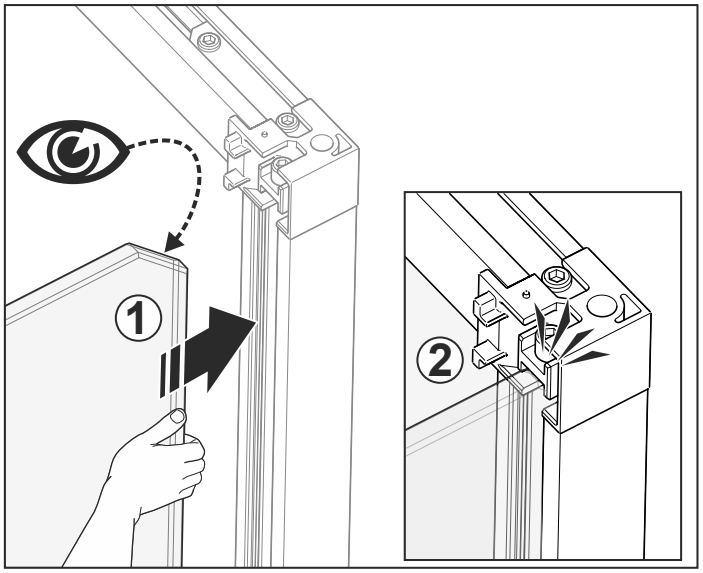

45

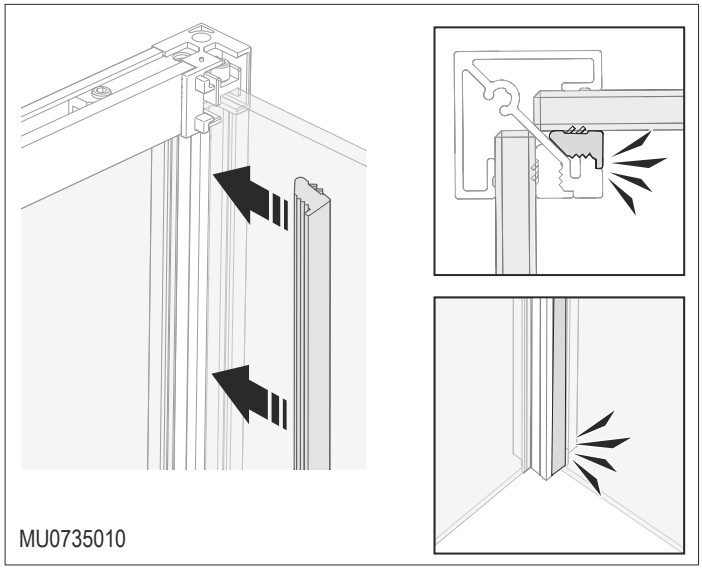

46

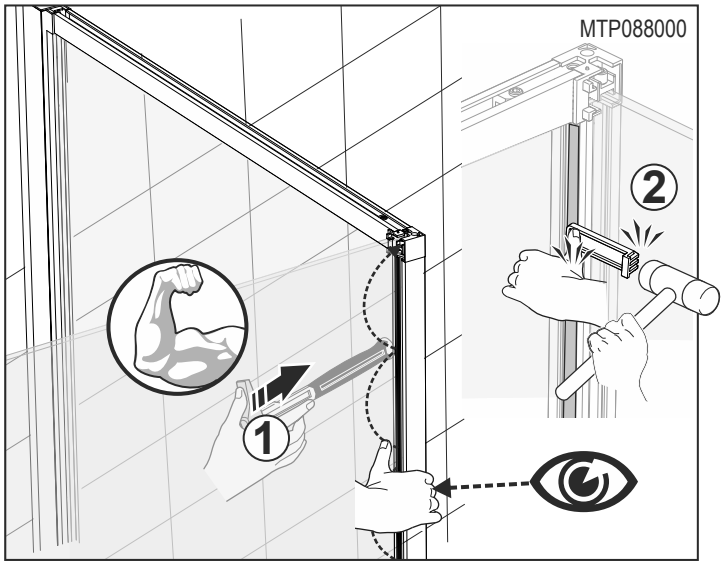

47

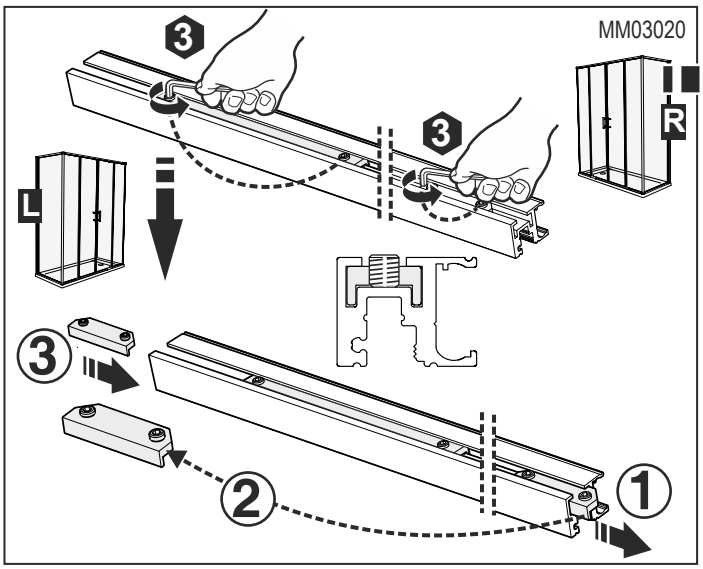

48

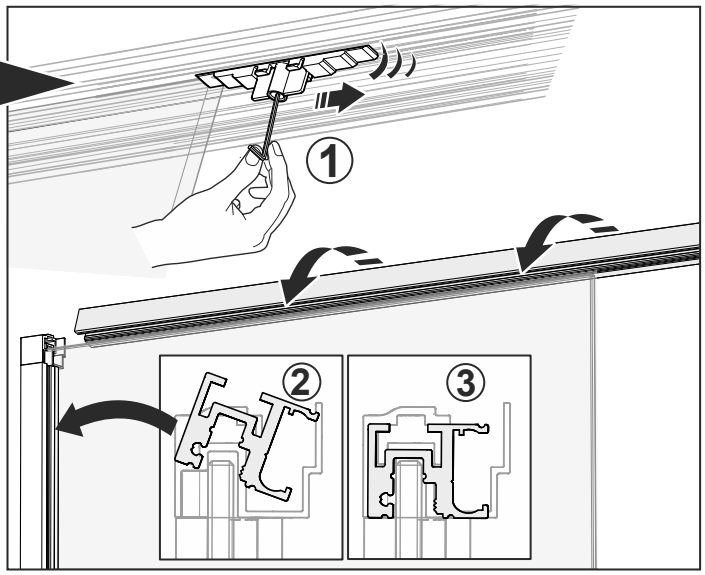

49

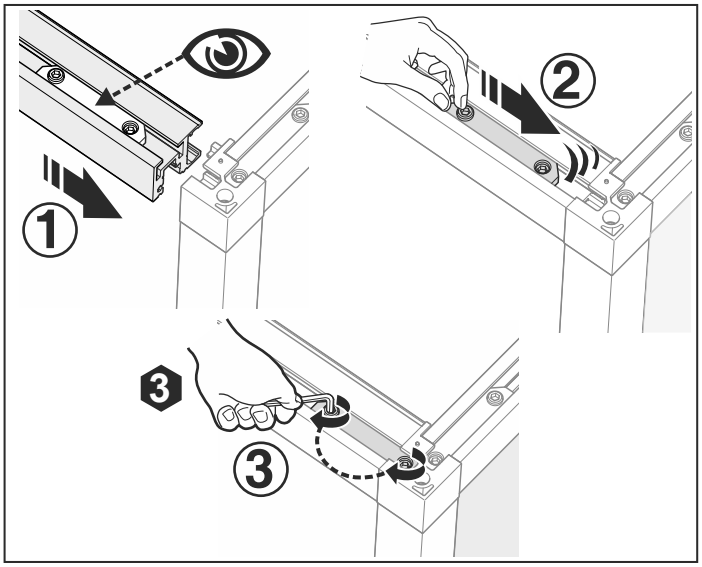

50

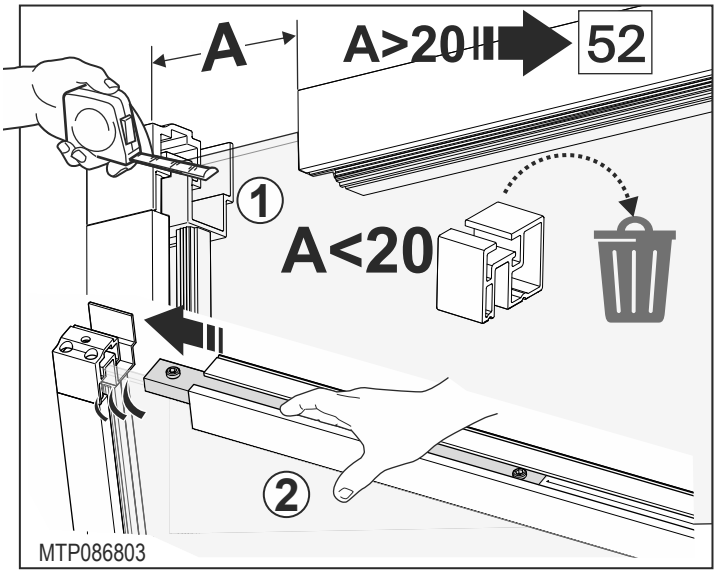

51

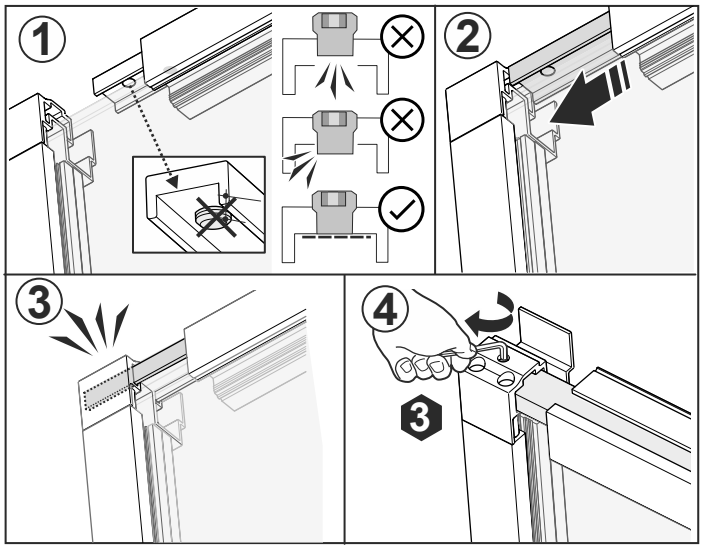

52

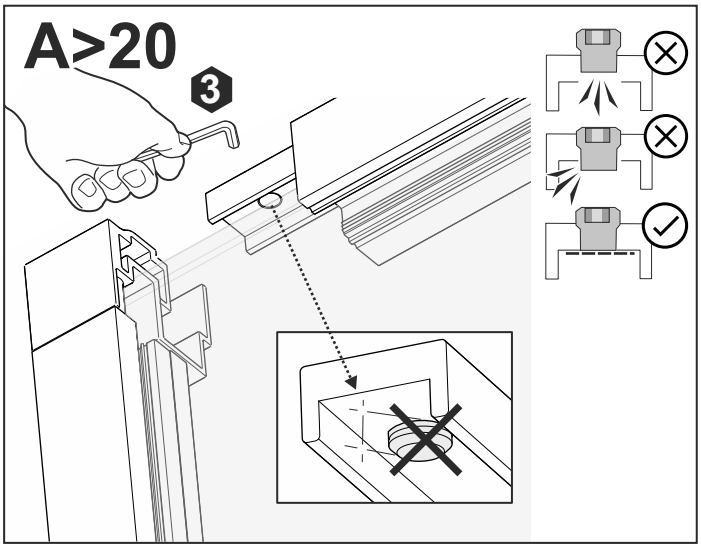

53

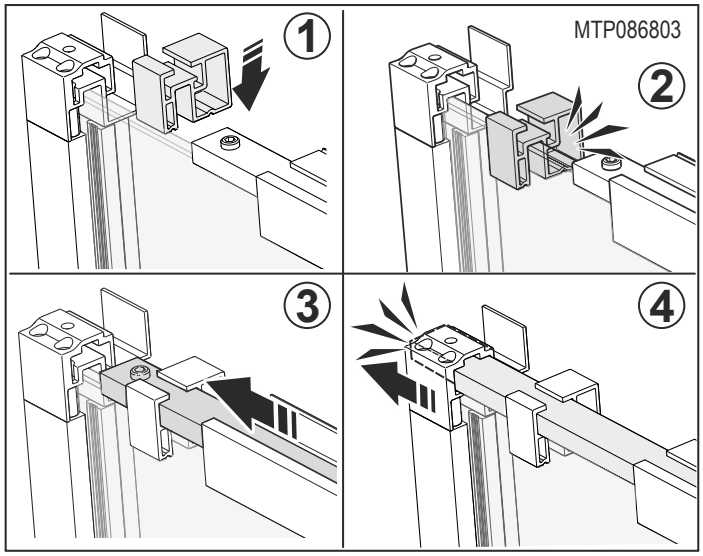

54

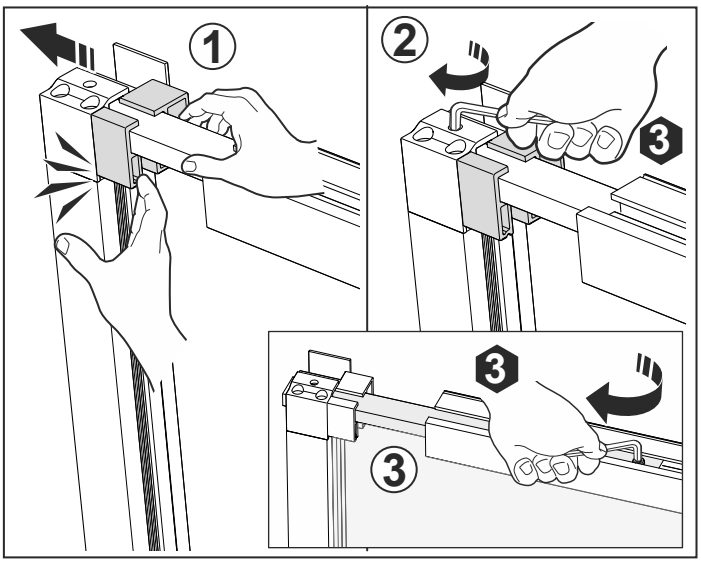

55

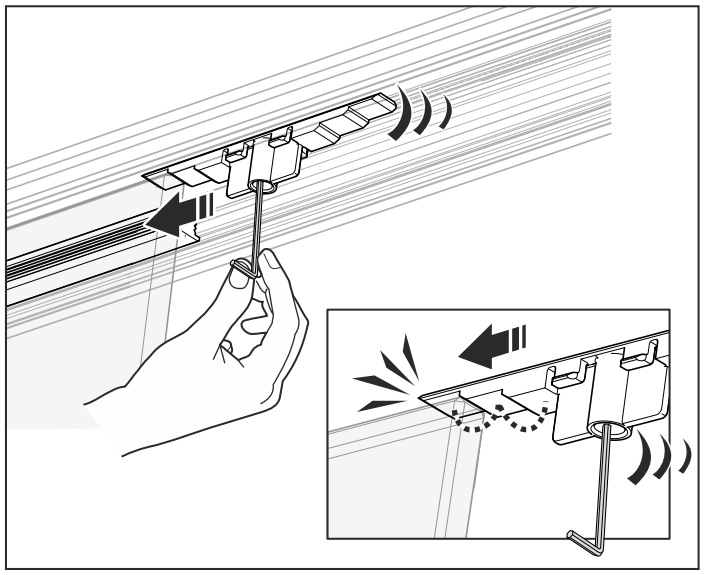

56

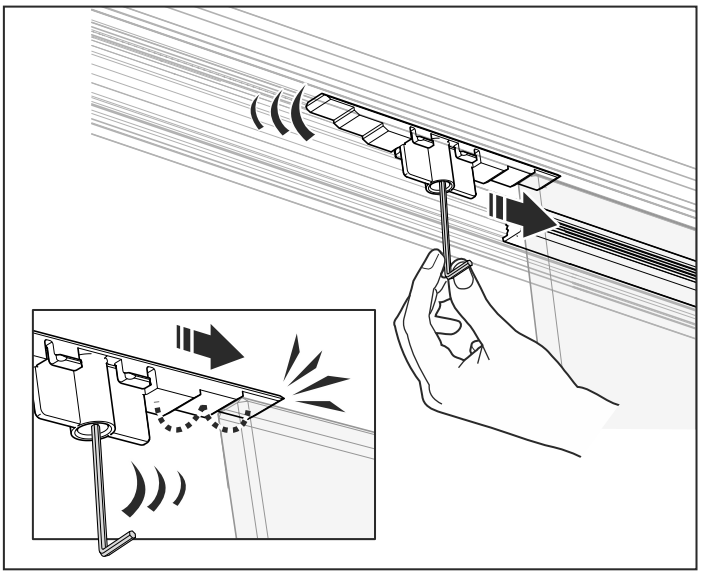

57

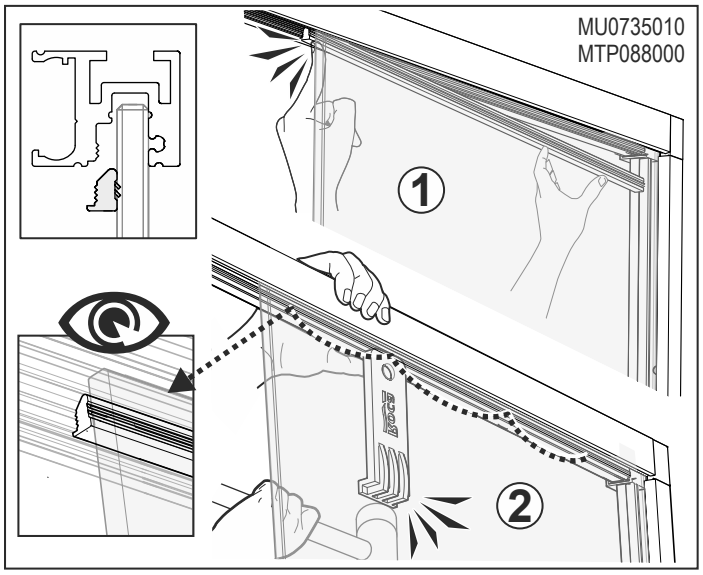

58

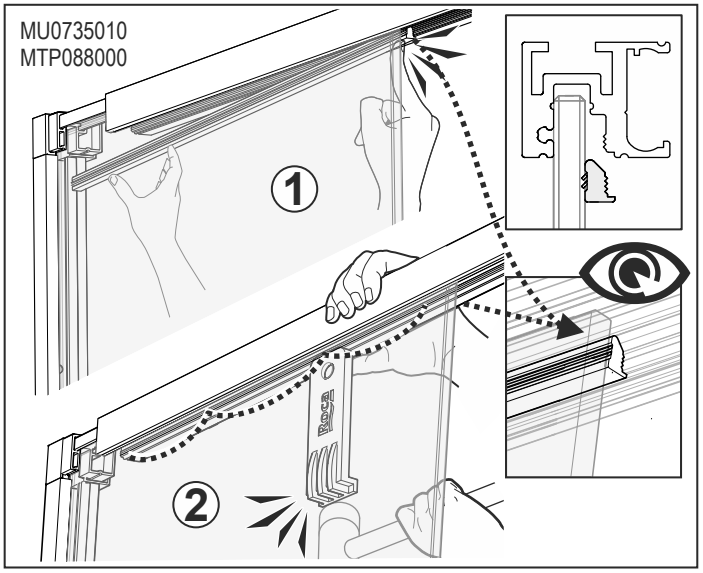

59

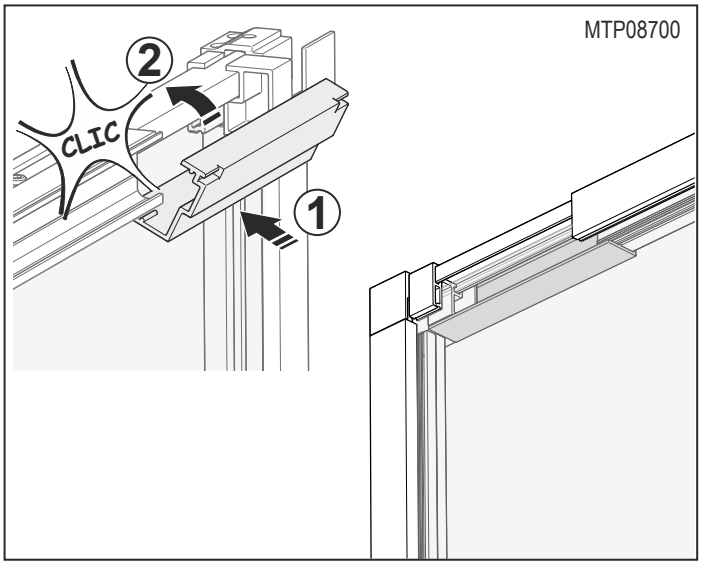

60

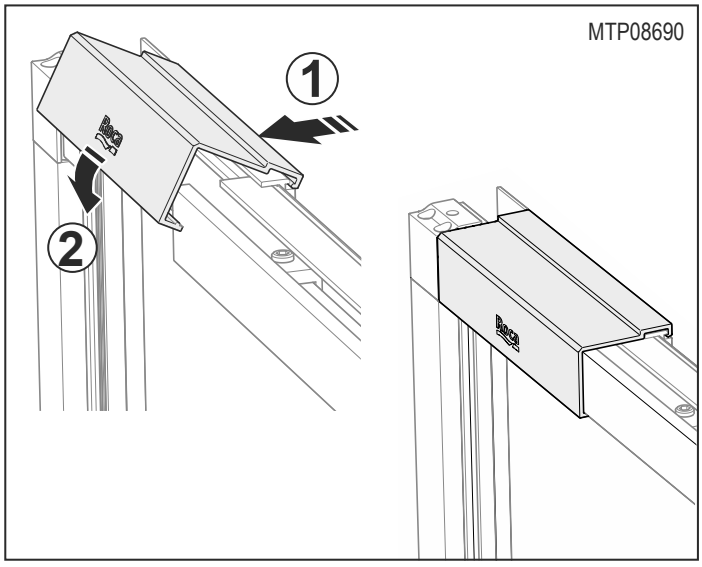

61

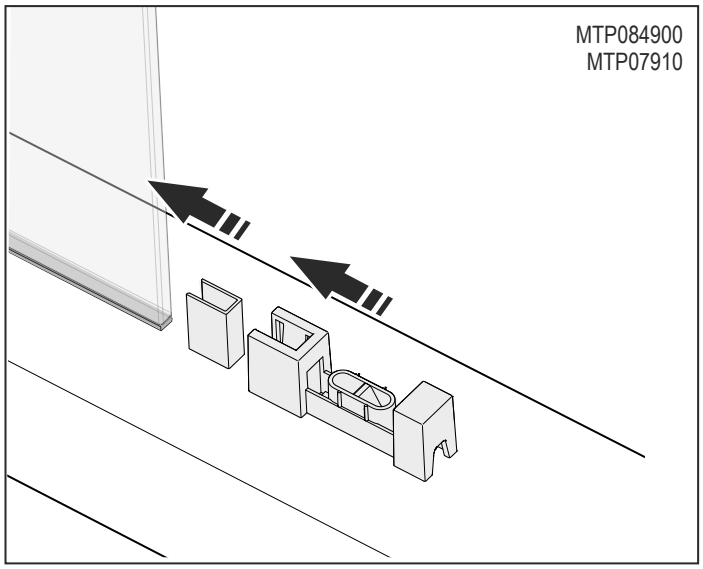

62

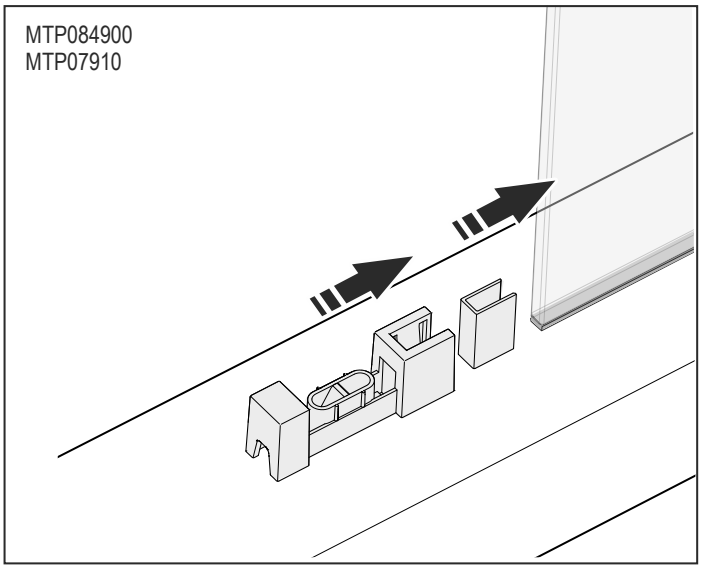

63

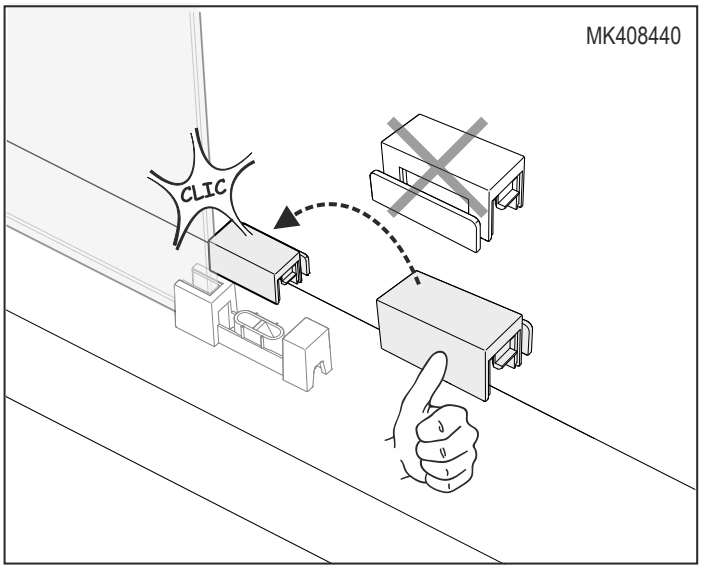

64

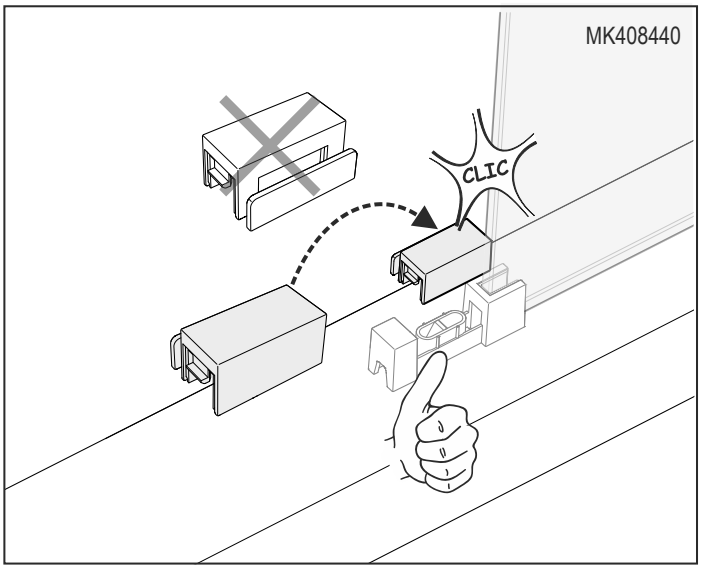

65

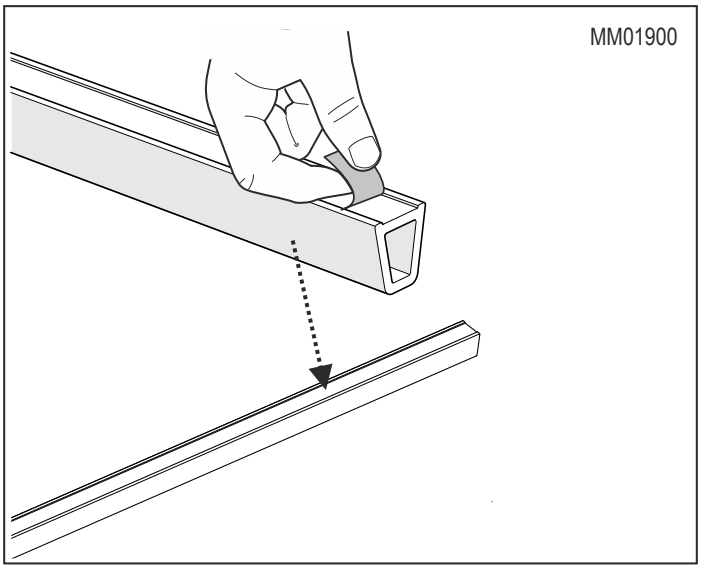

66

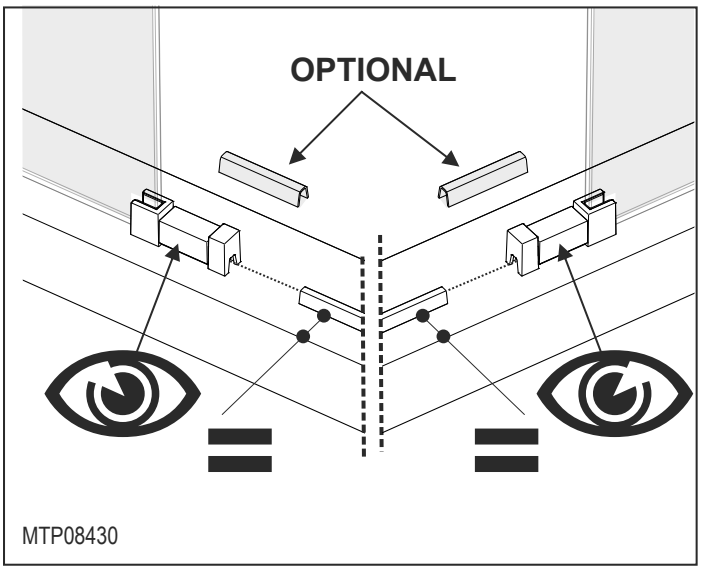

67

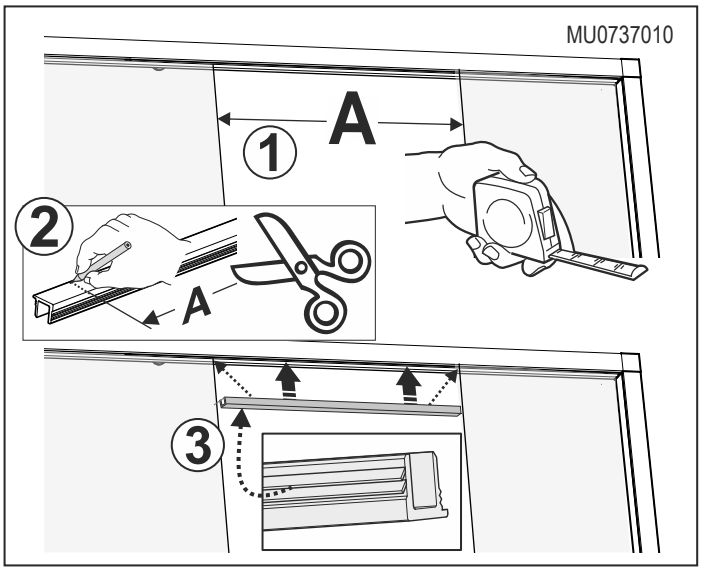

68

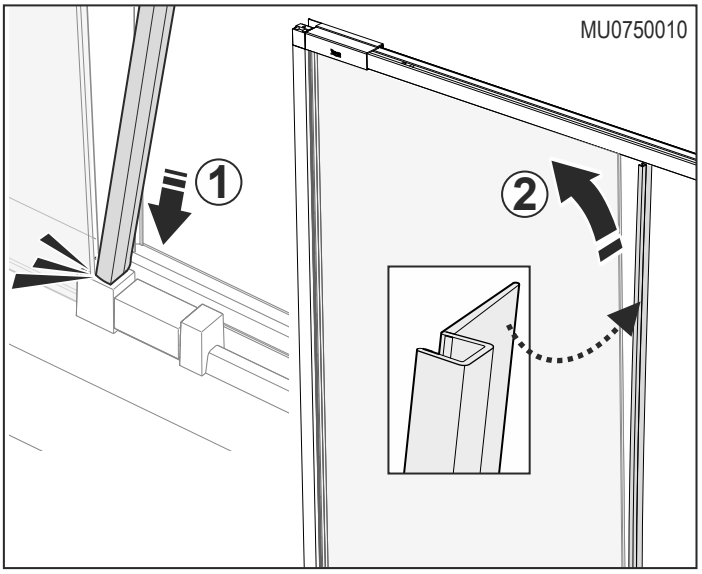

69

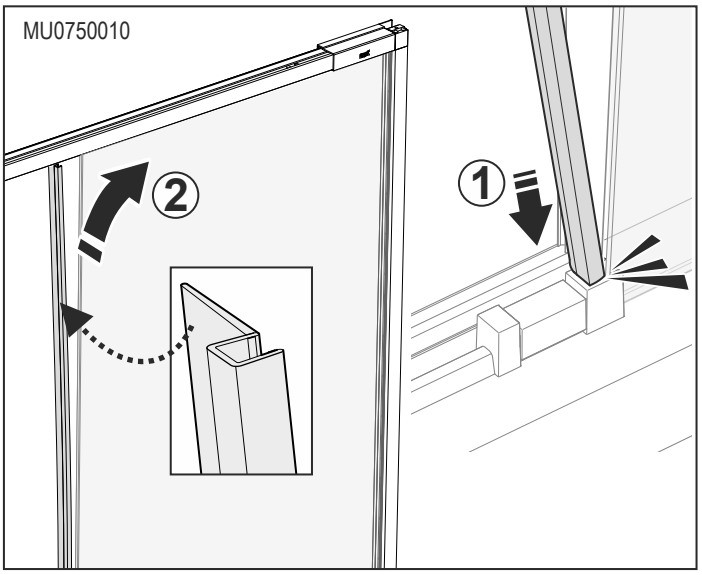

70

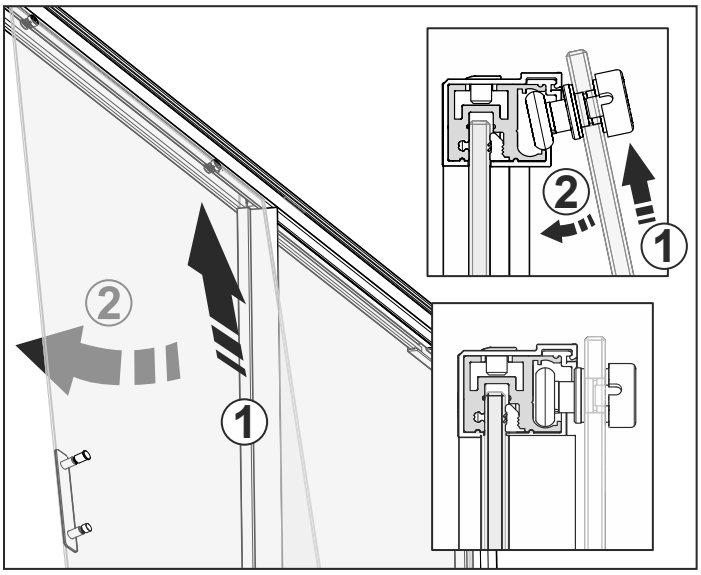

71

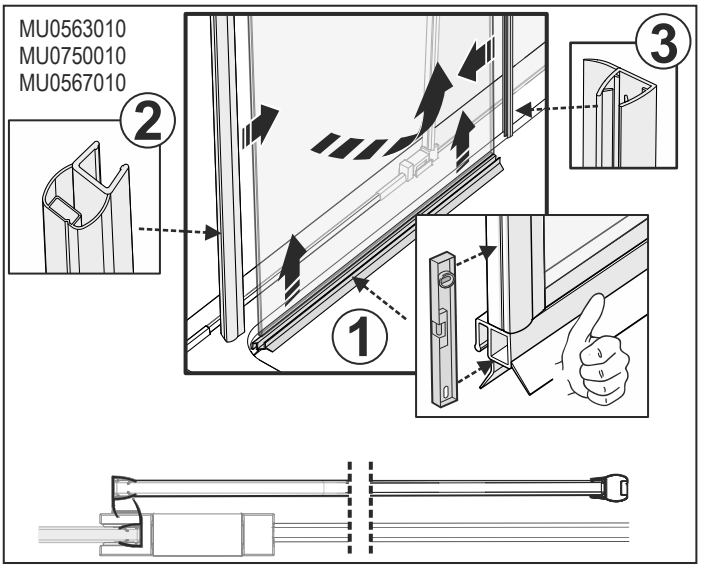

72

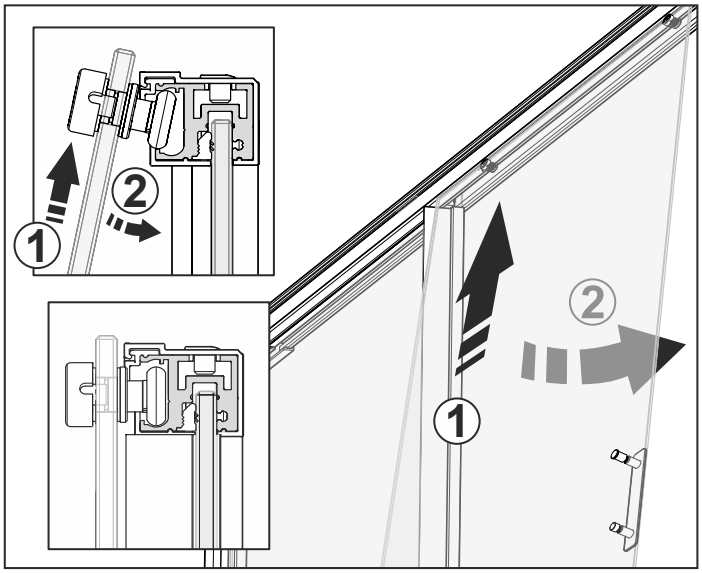

73

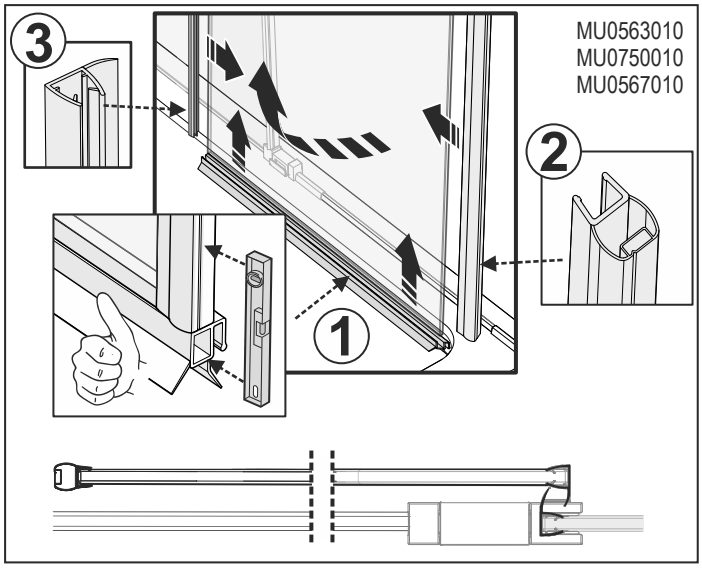

74

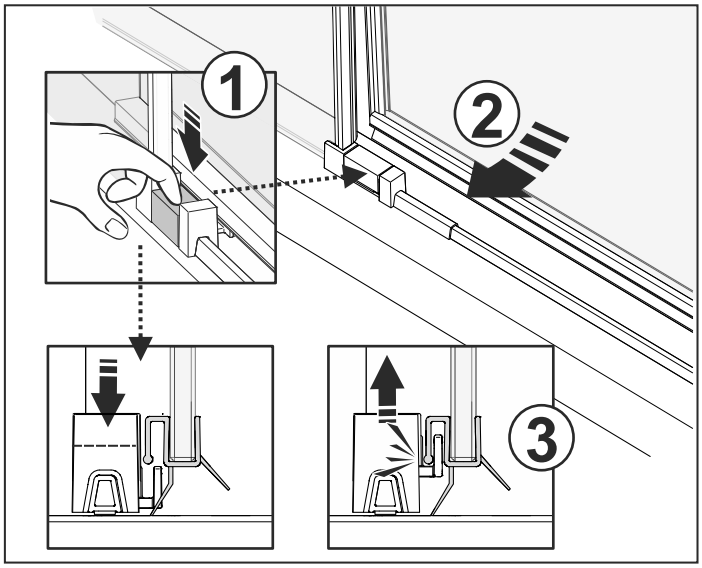

75

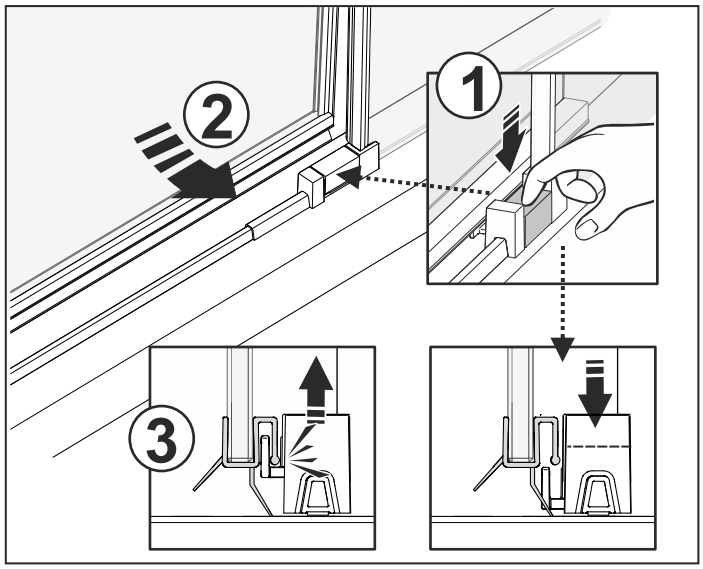

76

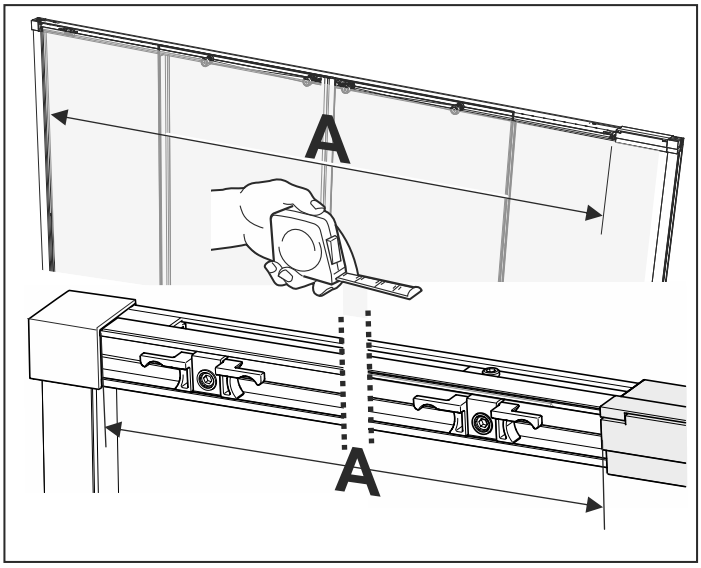

77

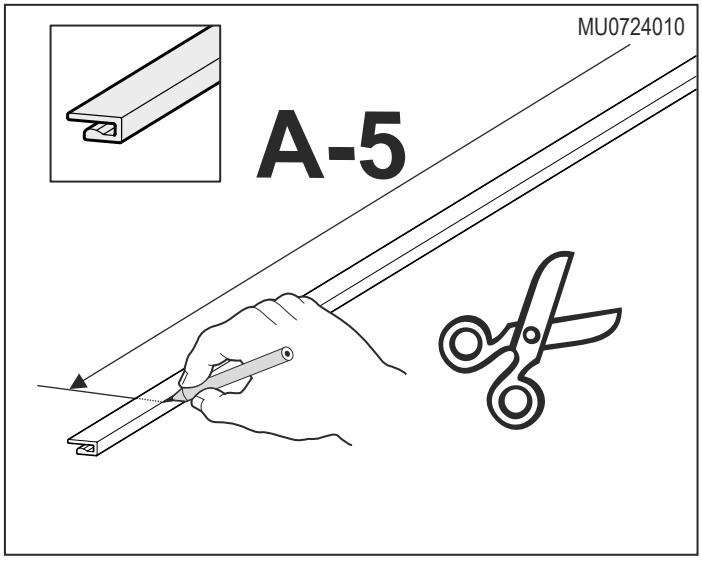

78

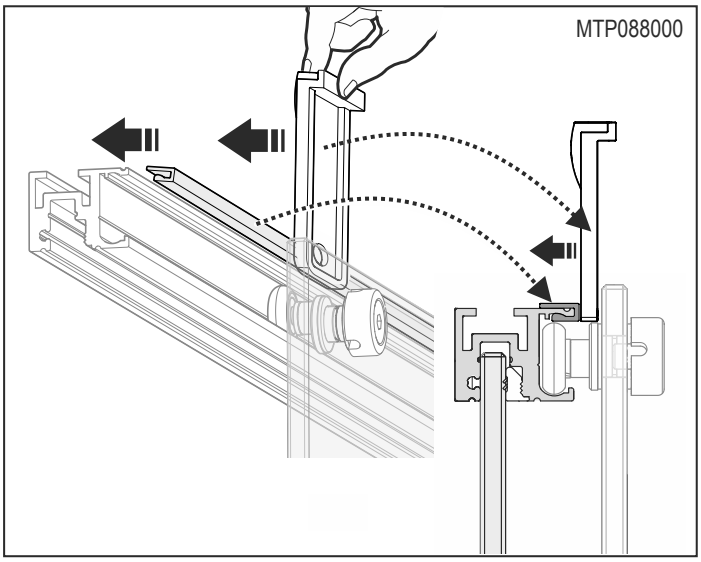

79

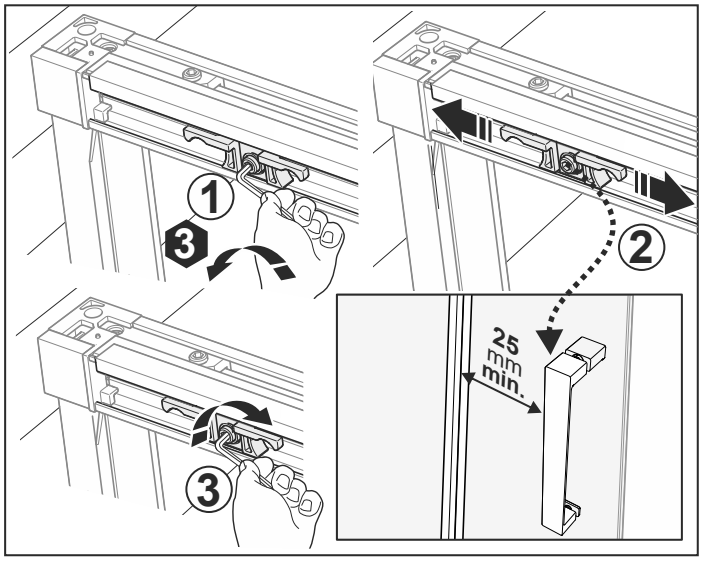

80

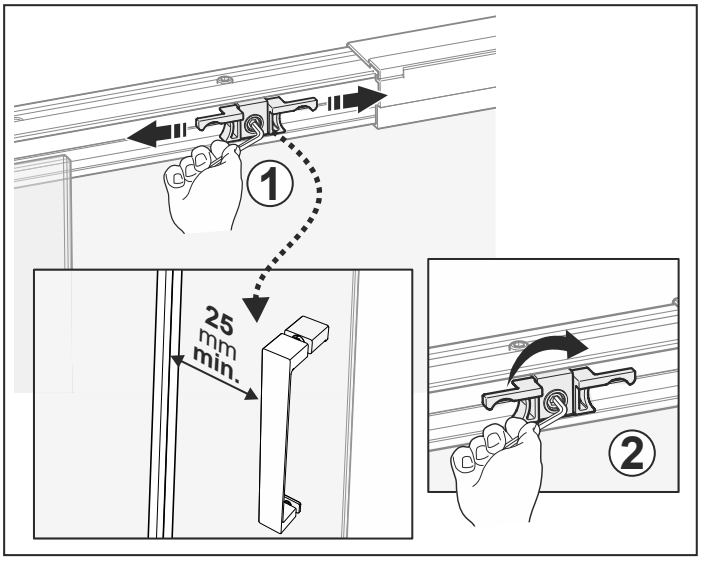

81

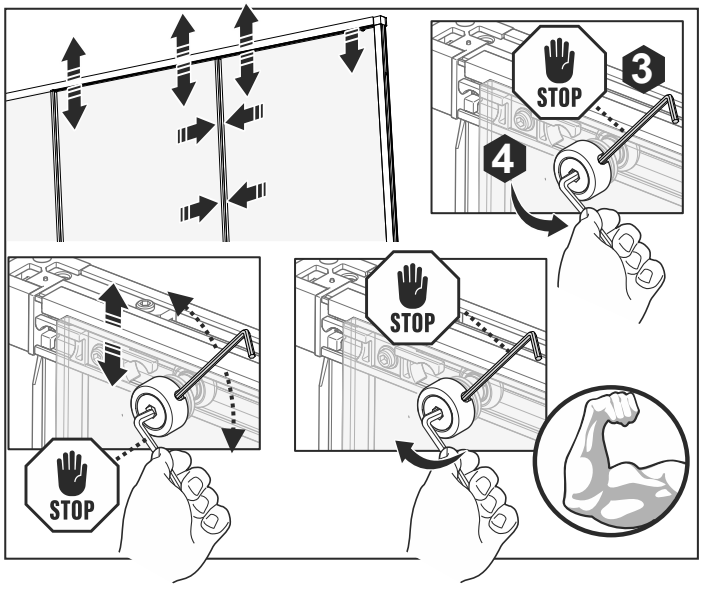

82

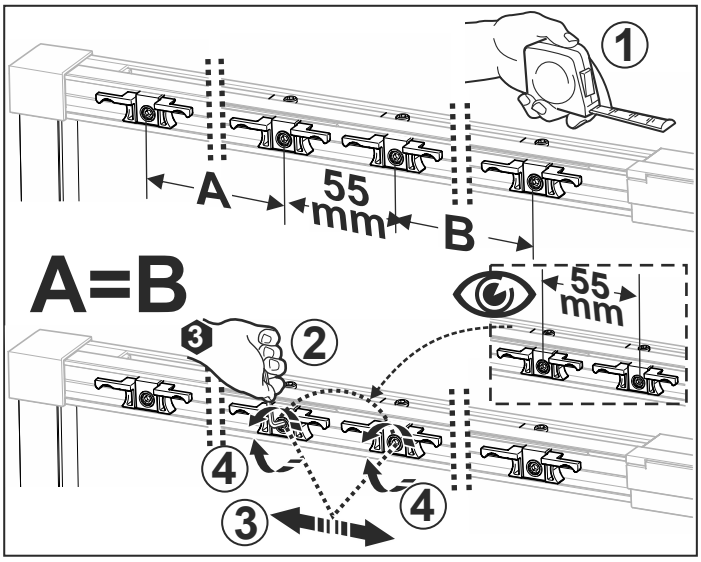

83

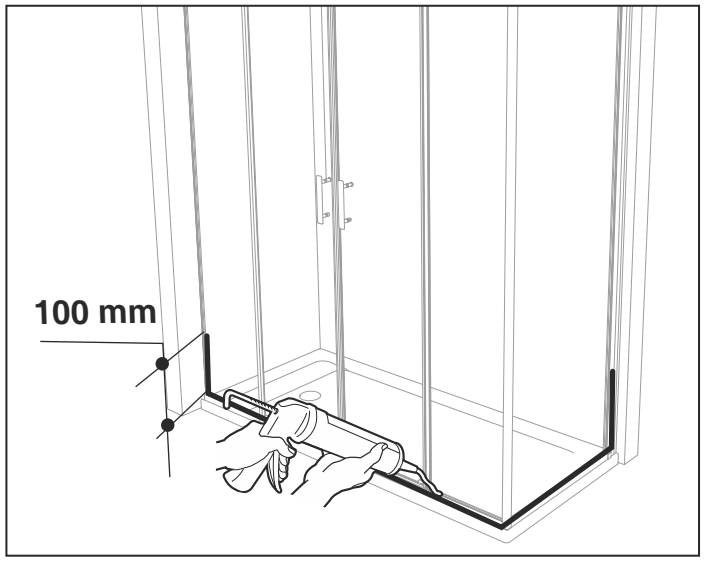

84

Roca Sanitario, S.A.U.
Avda Diagonal, 513
08029 Barcelona - España
roca.es

Línea de atención al cliente
Servicio Técnico Sanitario

+34 933 661 266

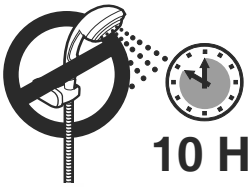

MTG1168