Ura

PE + LF

AM20M...
AM20N...

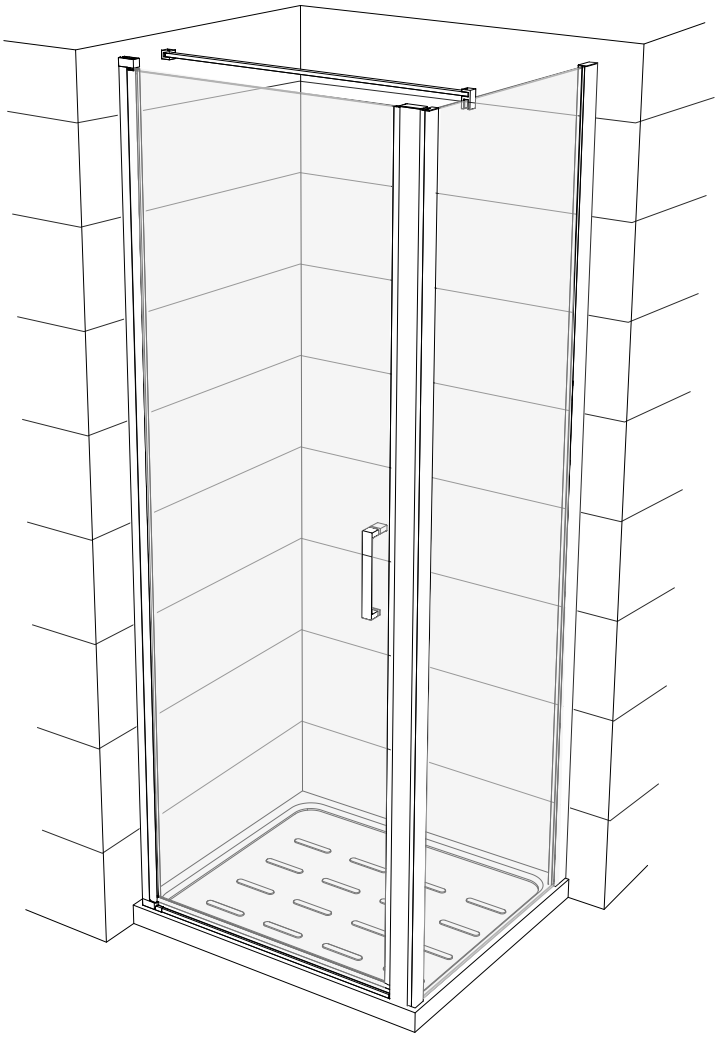

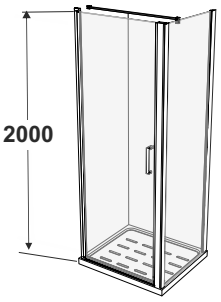

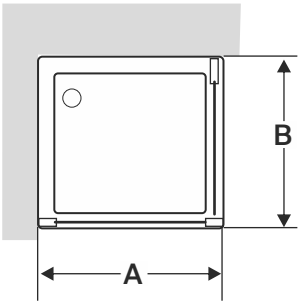

PE	A	
	min	máx.
800	775	815
900	875	915
1000	975	1015

LF	B	
	min	máx.
700	680	705
750	730	755
800	780	805
900	880	905

Roca

PE

MABRM

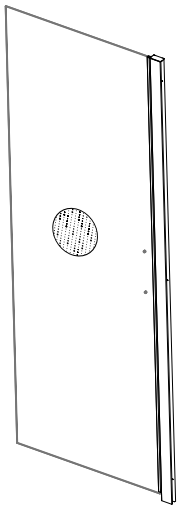

AM9437-M-

MM0311

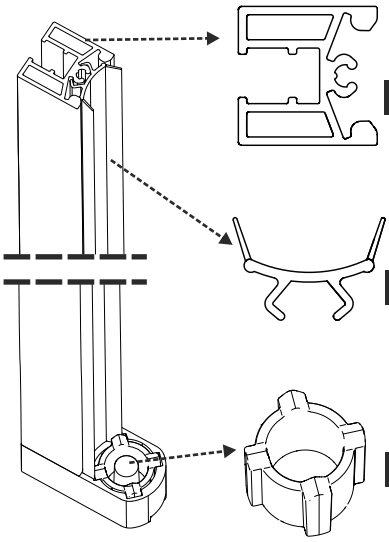

MP0233010

AM9943130-

MU0726010

AM99404300

MTP077203

AM99401803

MTS003200 MTS002900

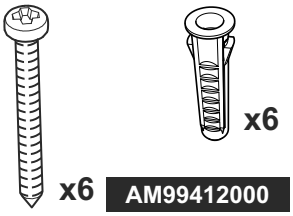

AM99412000

MTS024200

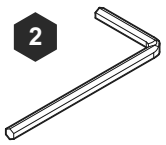

MTP0688L MTP0688R MTP06550

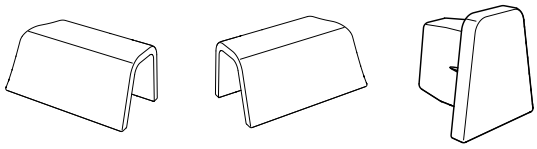

AM9940200-

MU0689010

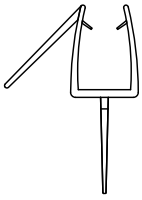

AM99404500

MK408560 MTS017600

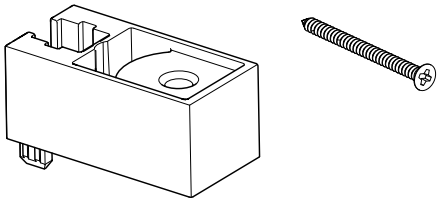

AM9940160-

AM9900010

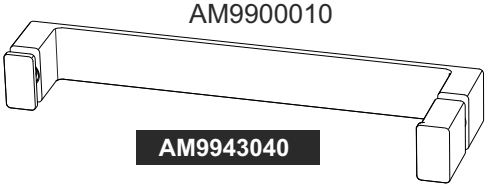

AM9943040

MTP085403

AM99430300

MU0738010

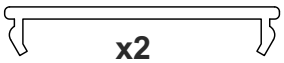

AM9943100-

MTP0784L MTP0784R

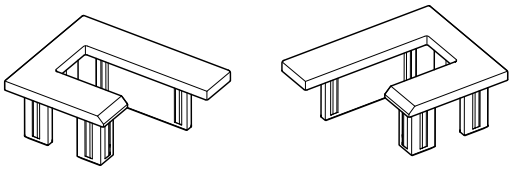

AM99401900

MTP087700 MTP087800

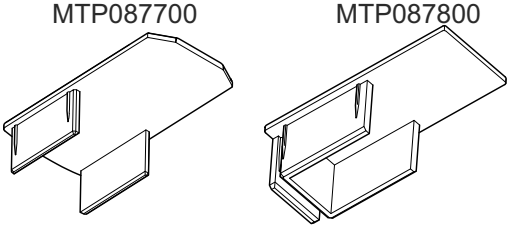

AM99430800

MU0567010

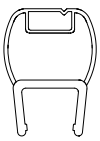

AM99415400

MP0264010

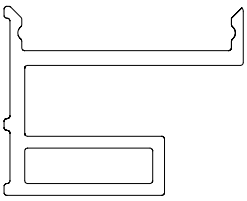

AM9940530-

MP0323010

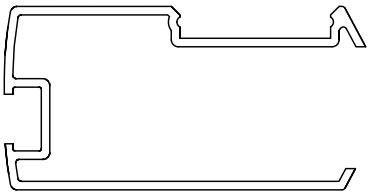

AM9943140-

MP0322010

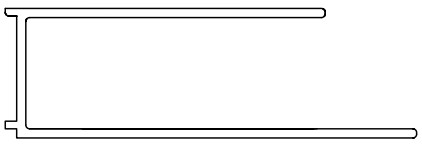

AM9943150-

MU0509010

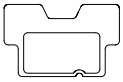

AM99438303

MM0190-

AM9939060

MTP067200

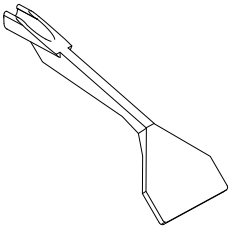

AM99412100

MTS001300

AM99348000

MTF015800 MTS016600 MTS011700

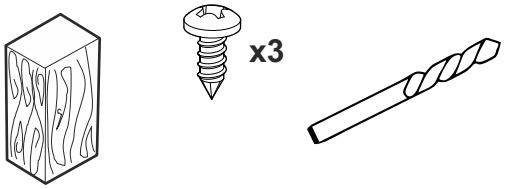

AM99402100

LF

MABLM

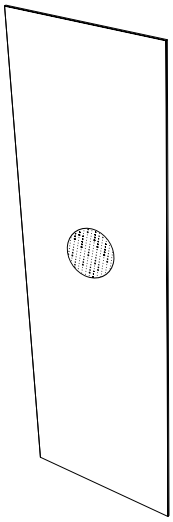

AM9943—M0

MTS001300

AM99348000

MTP042900

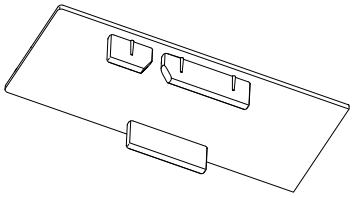

MTP043000

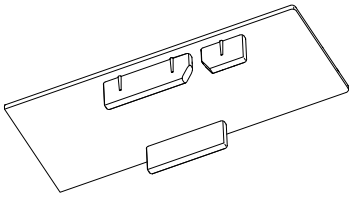

MTP088000

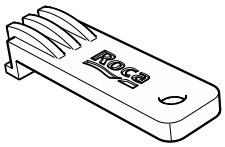

AM99412300

MTP0879L0

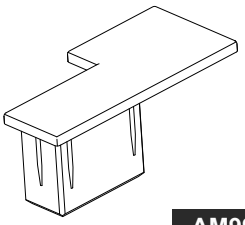

MTP0879R0

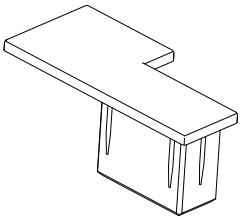

AM99430800

MTS006100

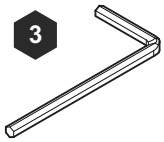

MU0735010

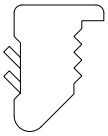

AM99414806

MU0562010

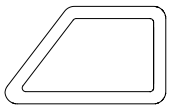

AM9939480-

MK407780

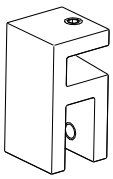

MK407830

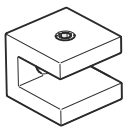

MTP07350

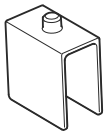

MTS003200

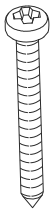

MTS002900

AM9940110-

MP0218010

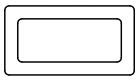

AM9940520-

MP0324010

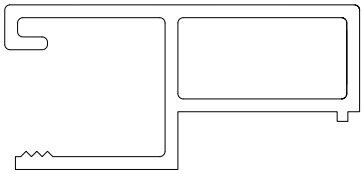

AM9943160-

MM0310

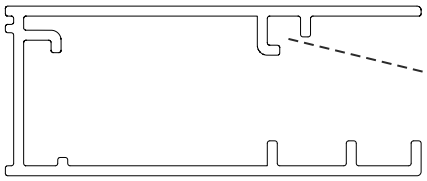

AM9939520-

MU0564010

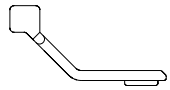

AM99394900

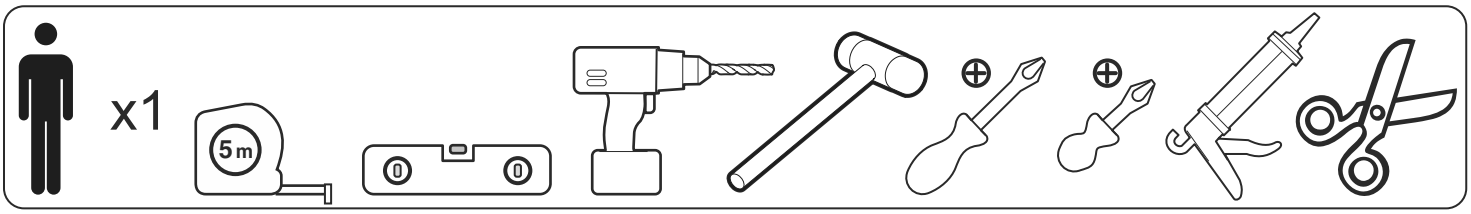

1

PE	A min	A máx.
800	775	815
900	875	915
1000	975	1015

LF	B min	B máx.
700	680	705
750	730	755
800	780	805
900	880	905

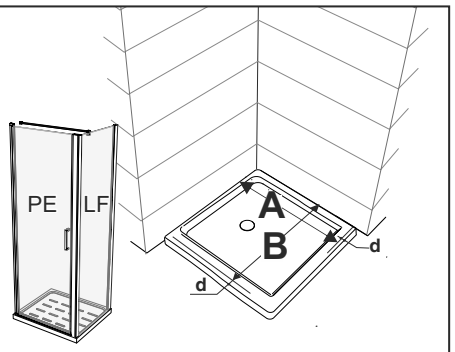

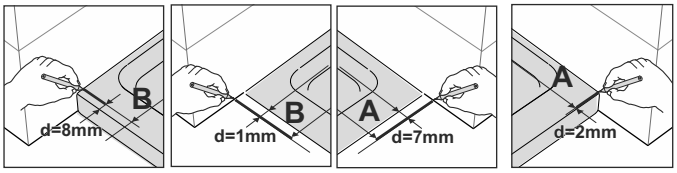

2

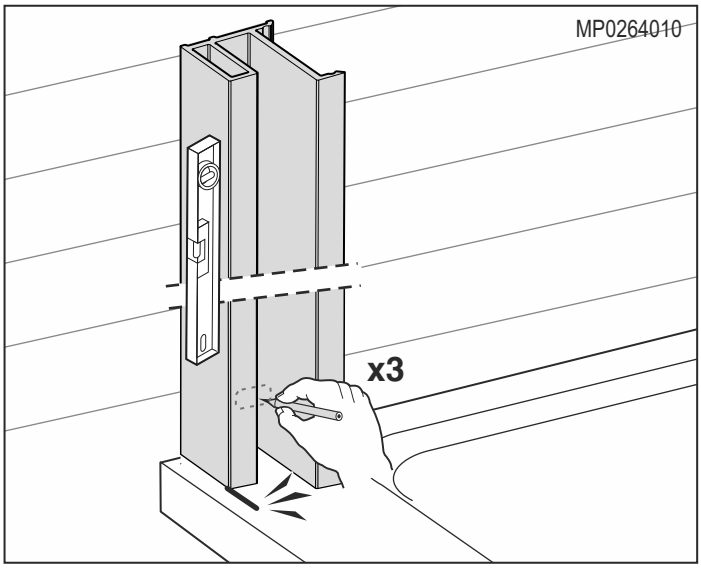

3

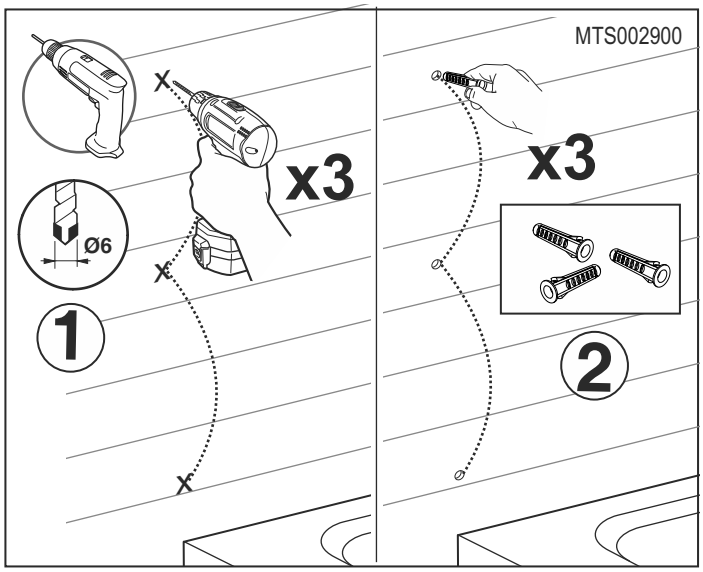

4

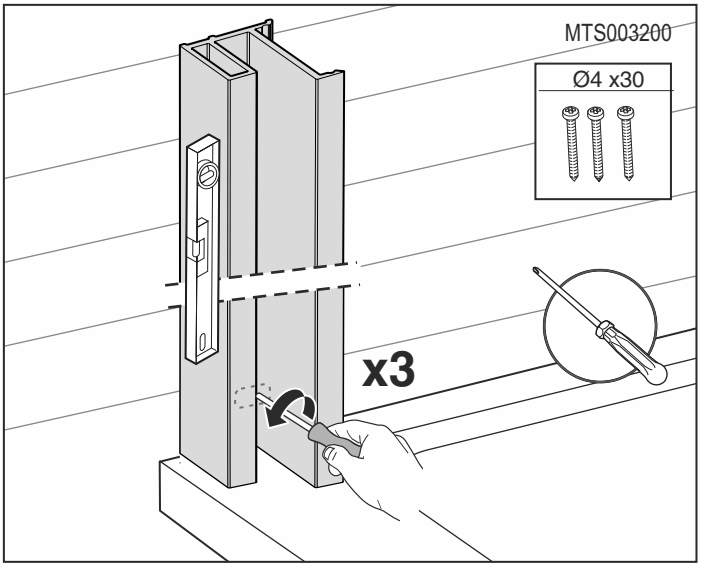

5

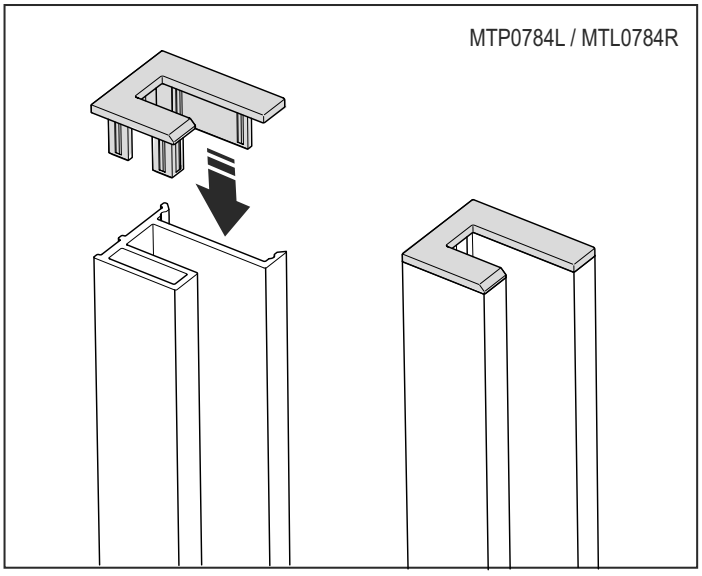

6

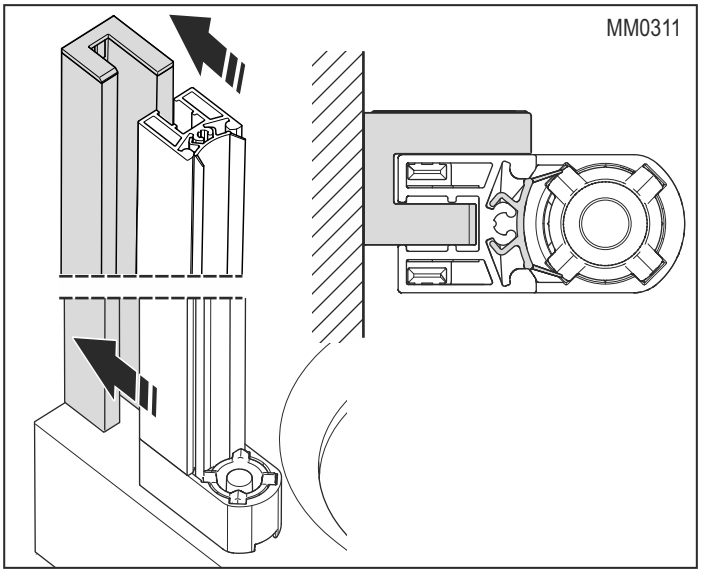

7

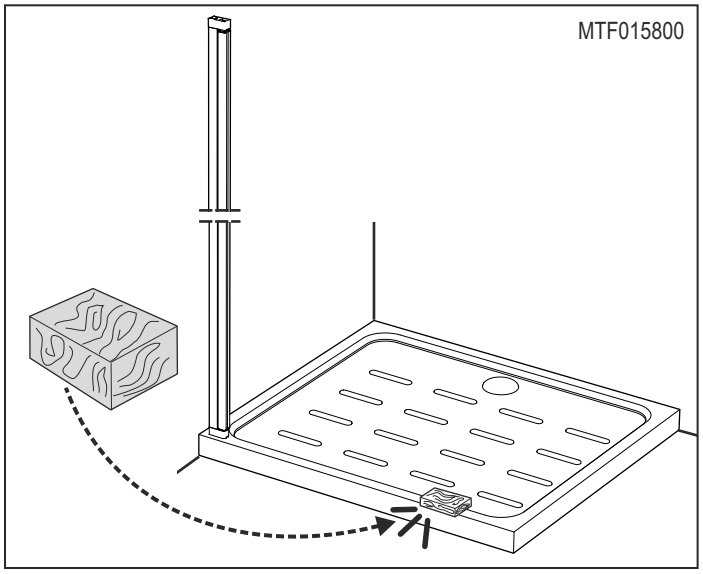
MTF015800

8

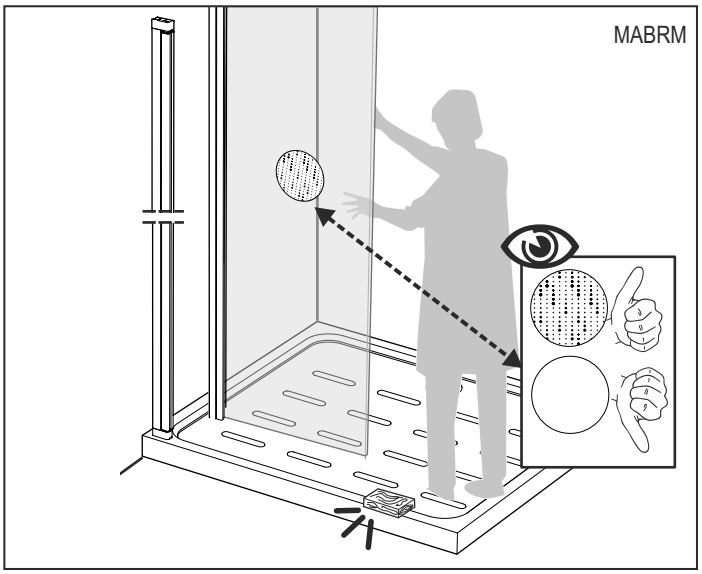
MABRM

9

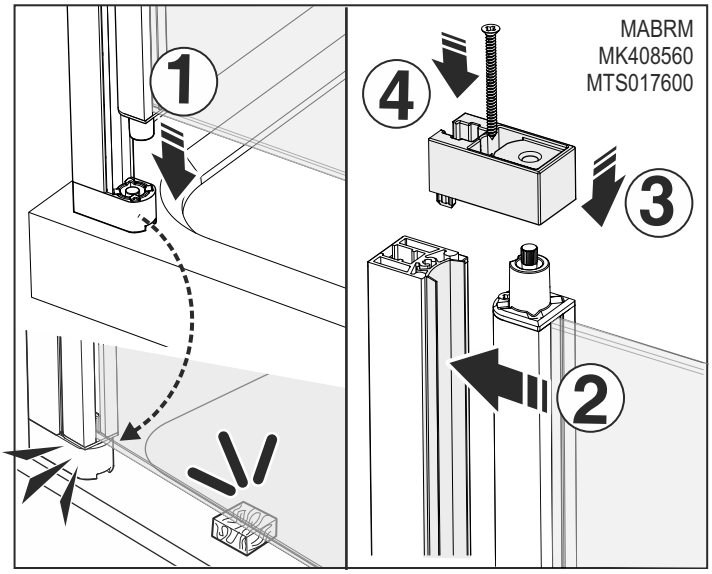
1
MABRM
MK408560
MTS017600
4
3
2

10

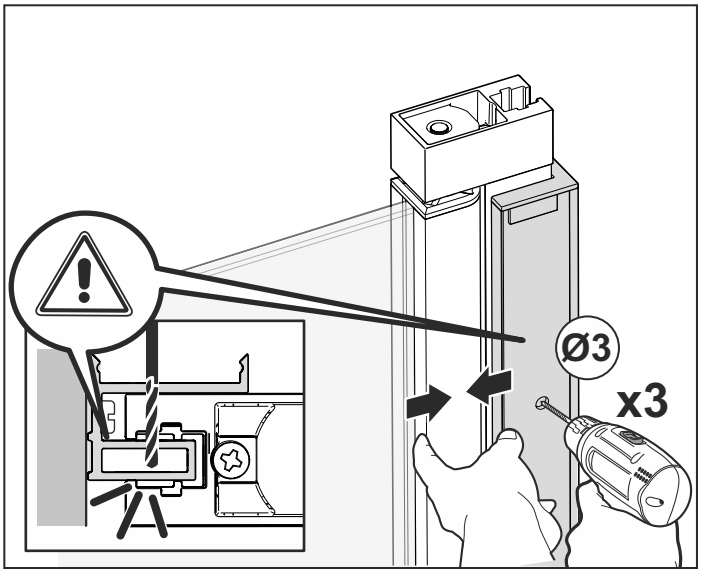
Ø3
x3

11

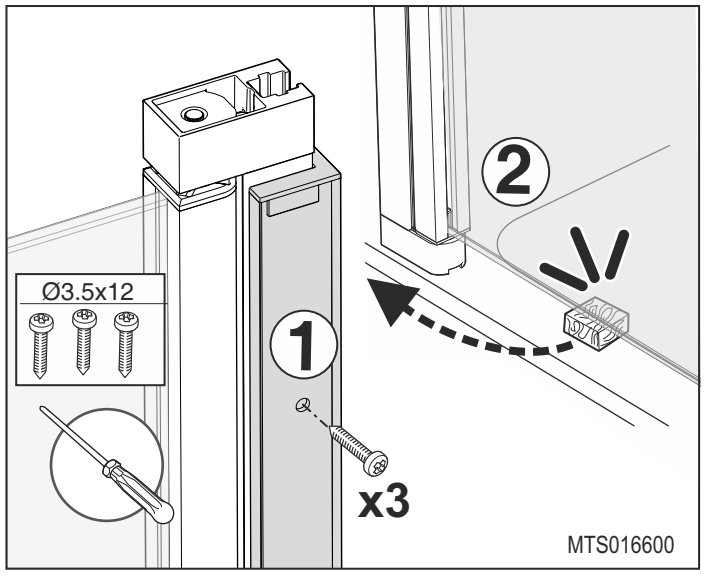
Ø3.5x12
2
1
x3
MTS016600

12

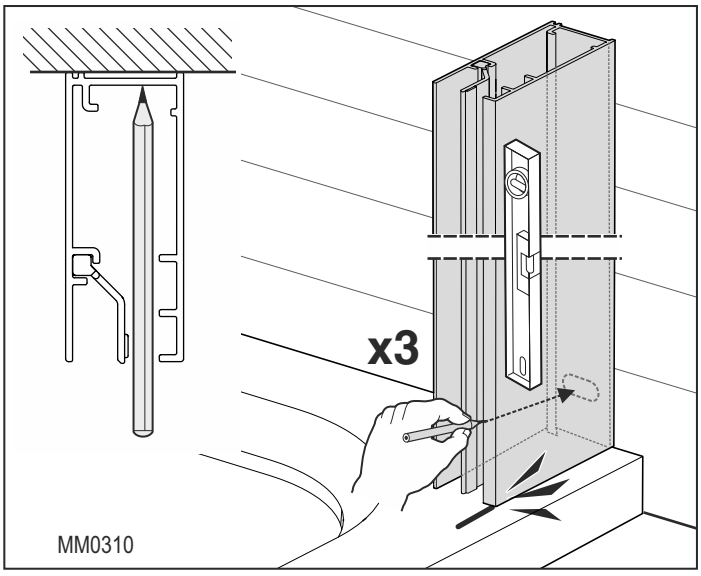
x3
MM0310

13

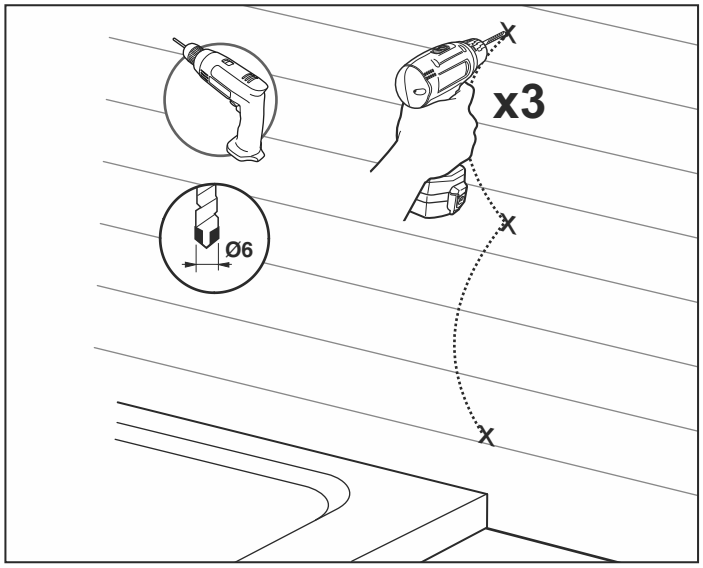

14

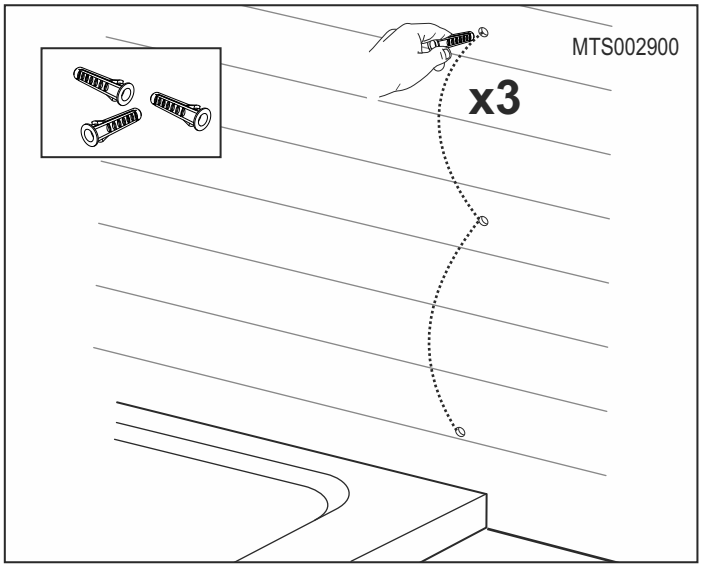

15

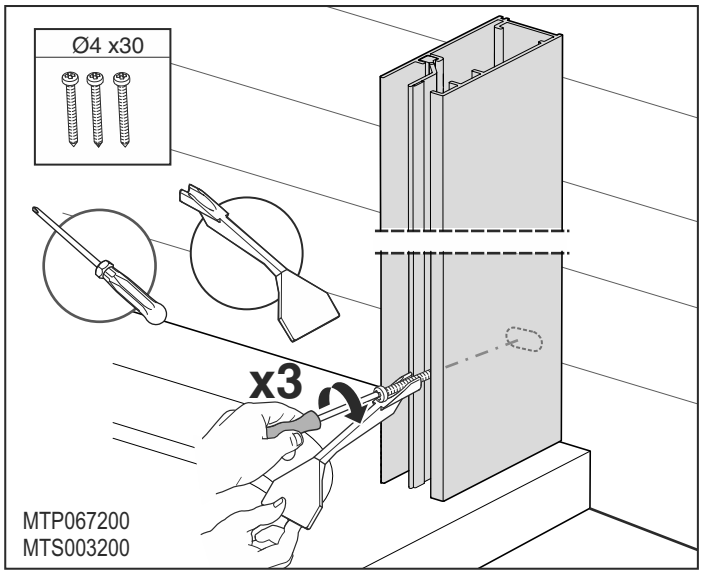

16

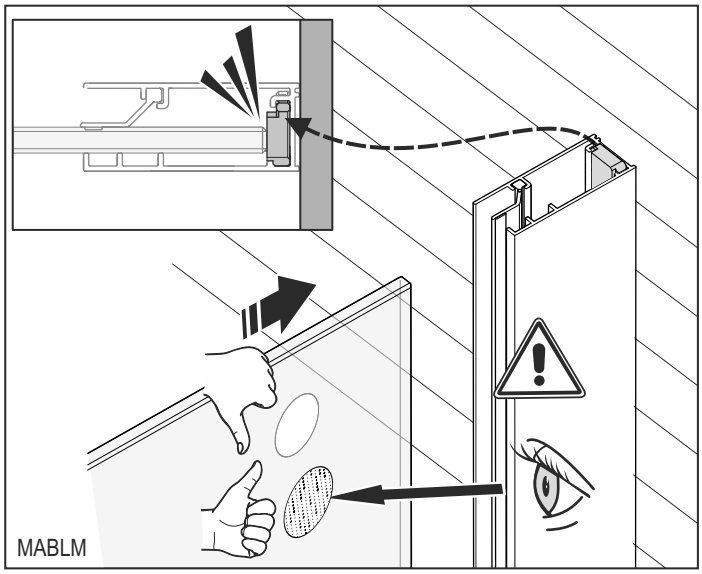

17

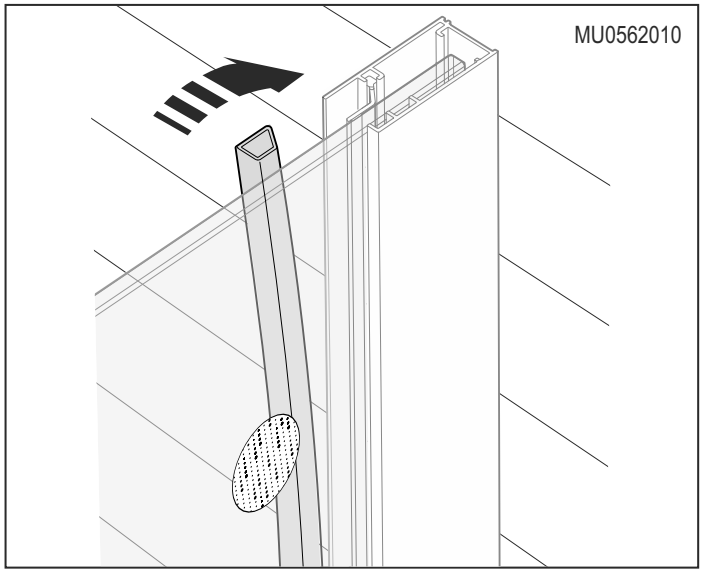

18

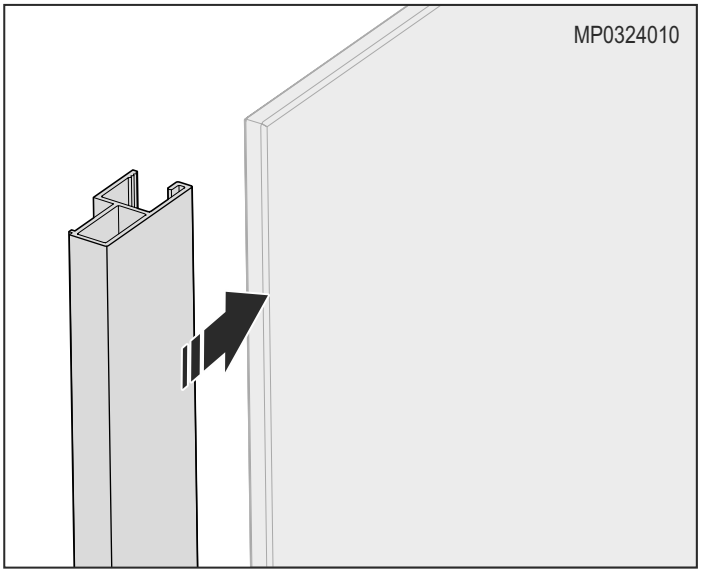

19

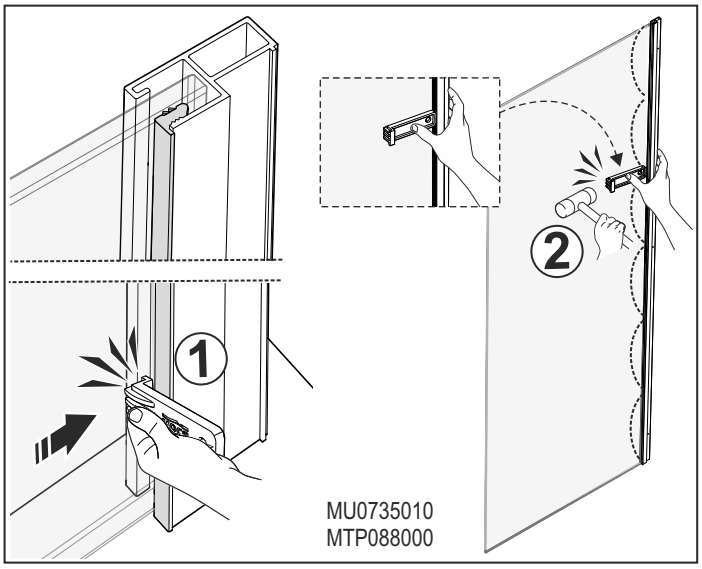

20

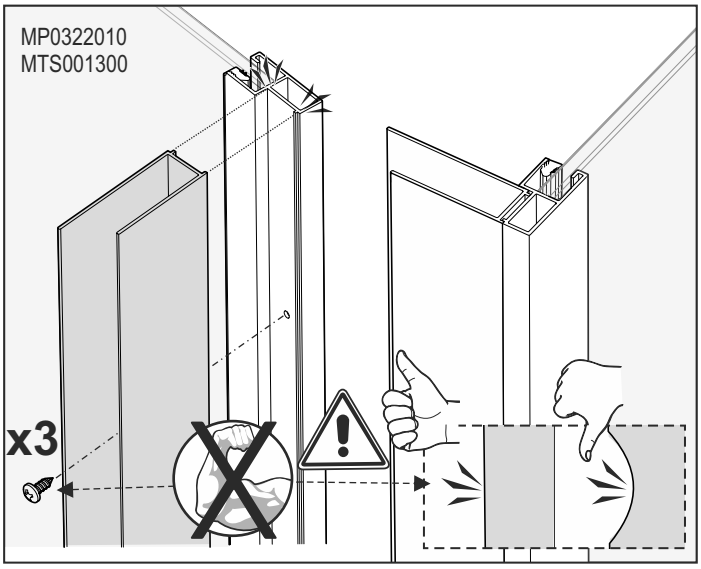

21

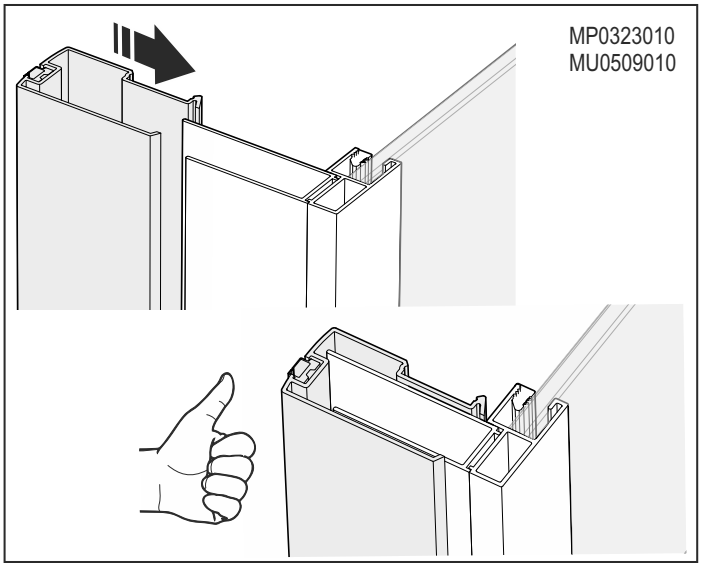

22

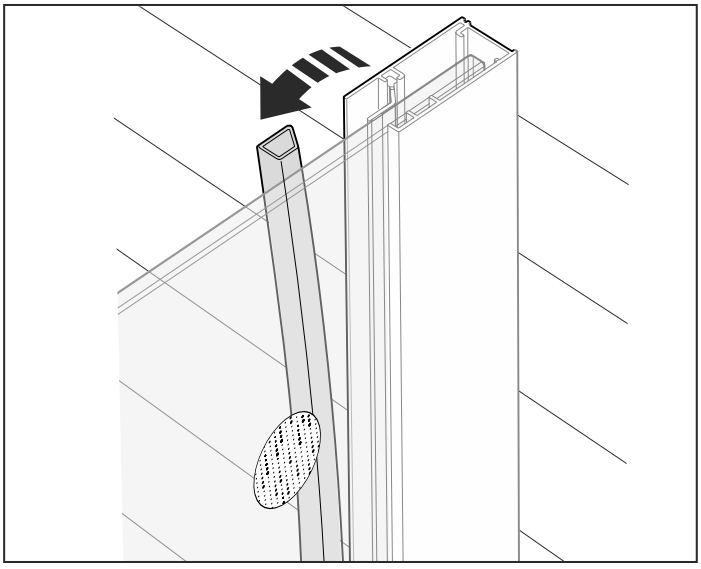

23

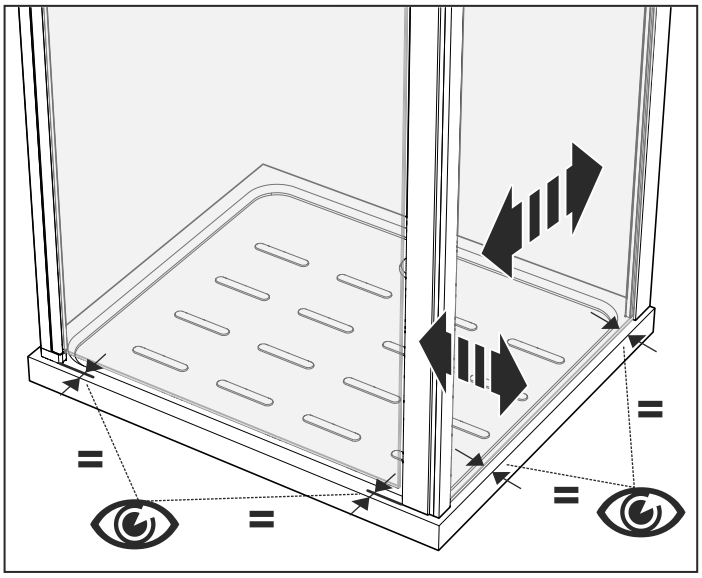

24

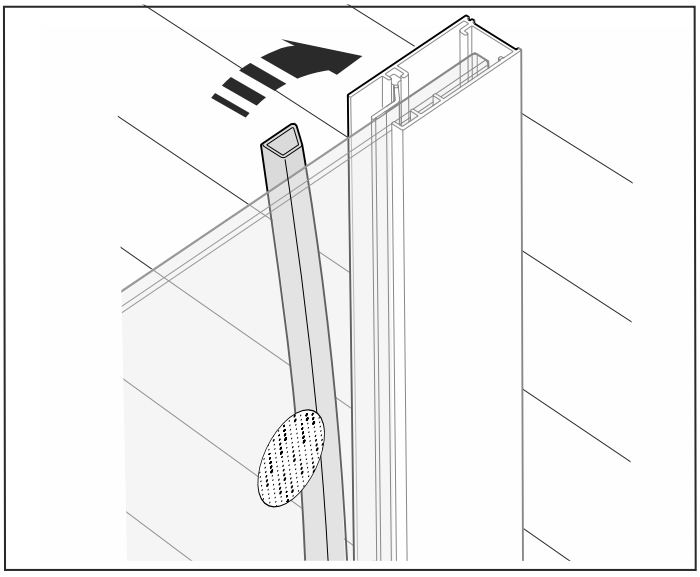

25

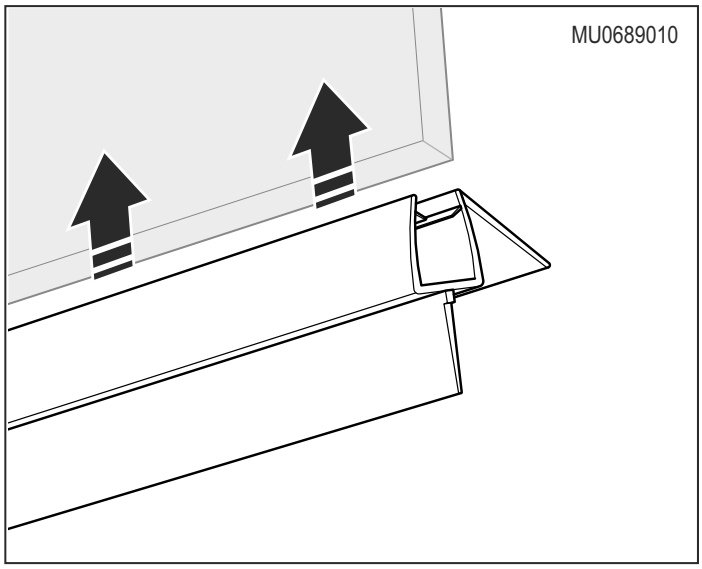

26

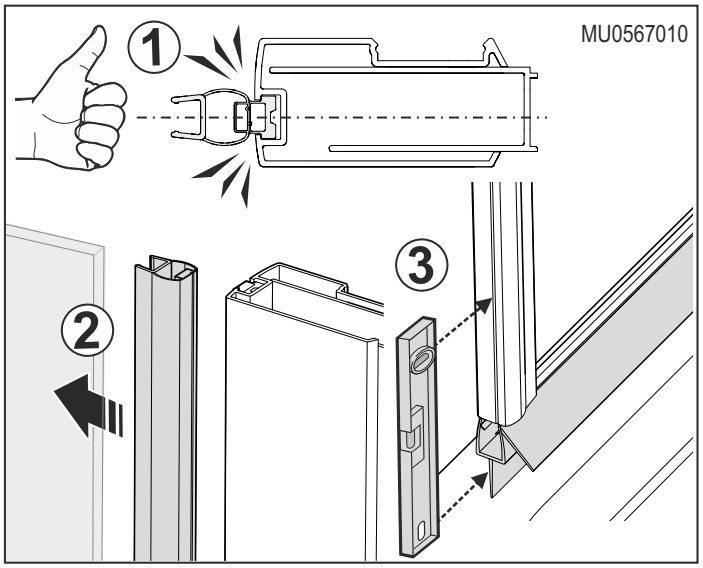

27

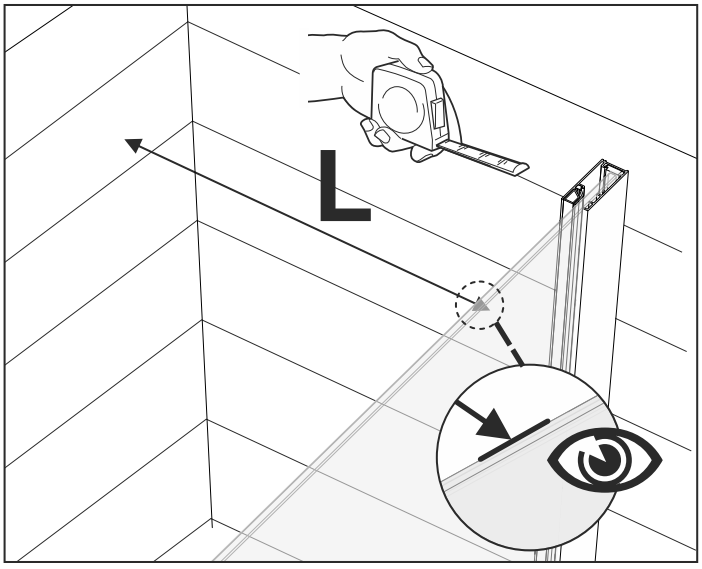

28

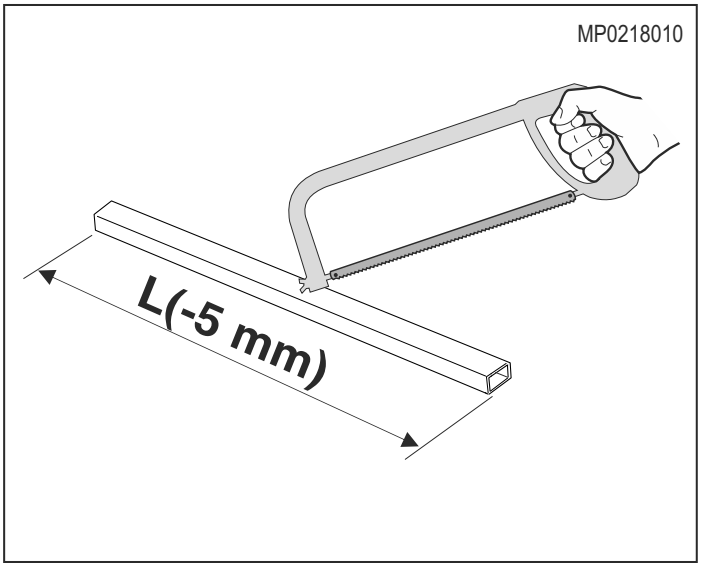

29

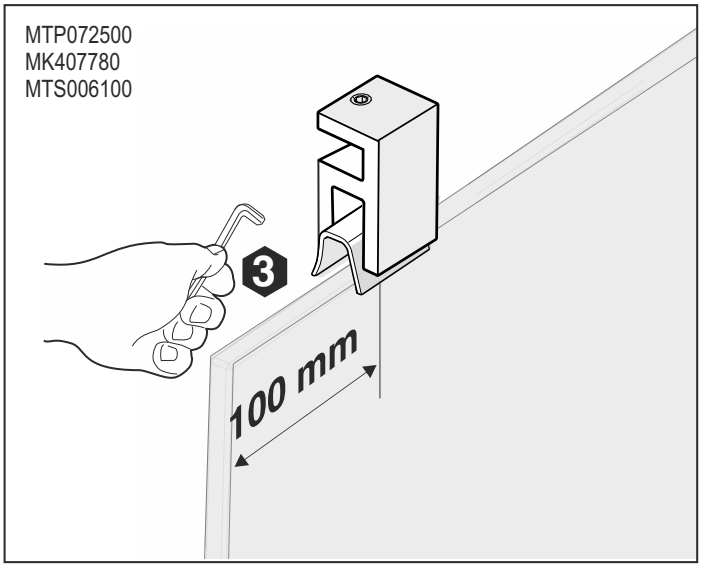

30

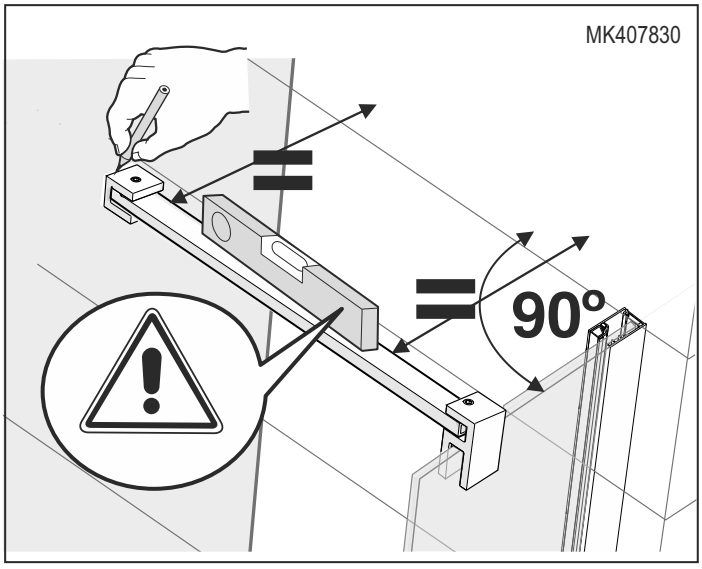

31

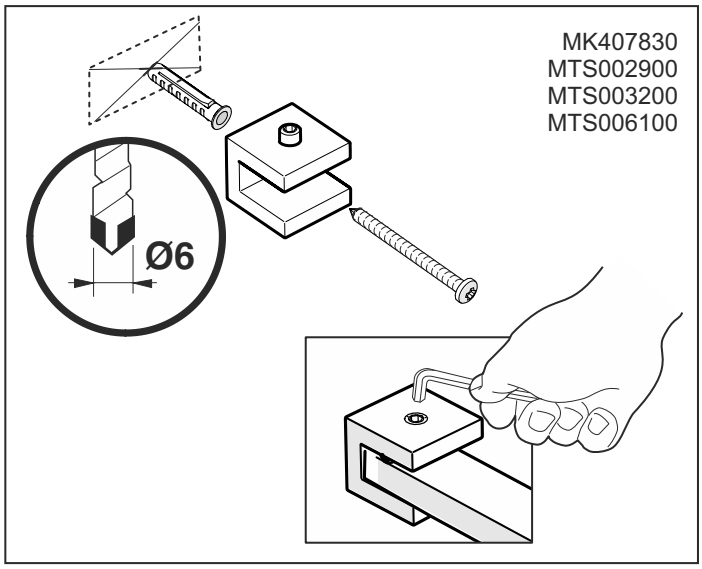

32

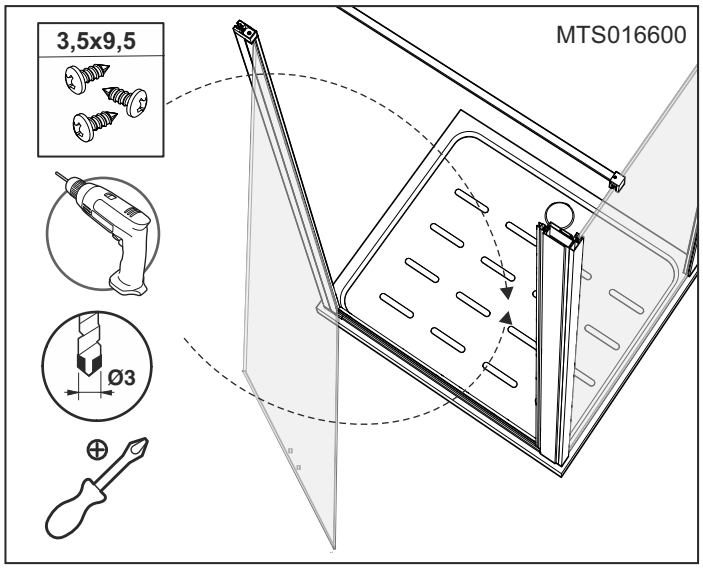

33

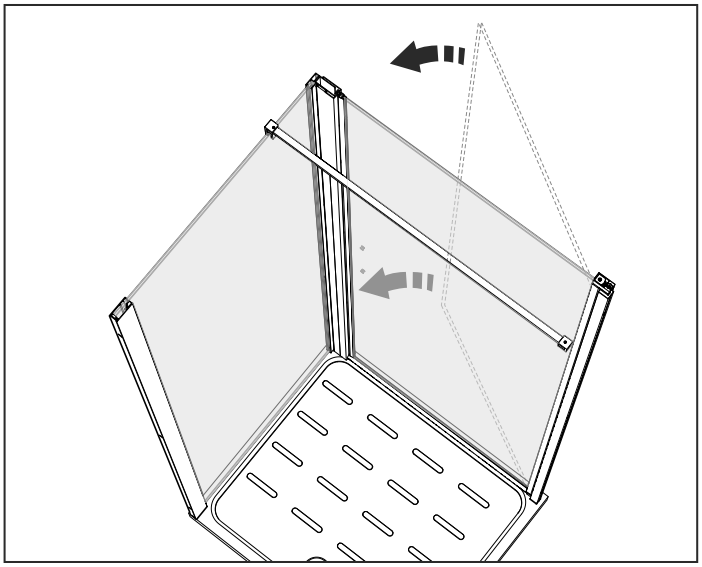

34

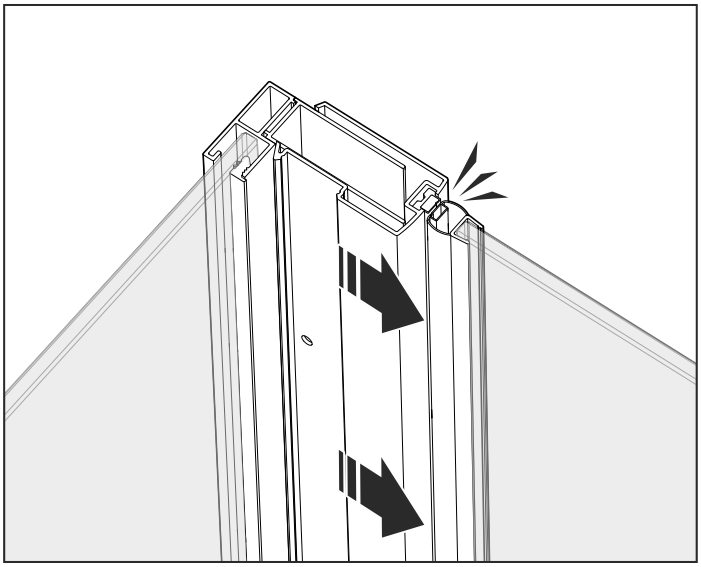

35

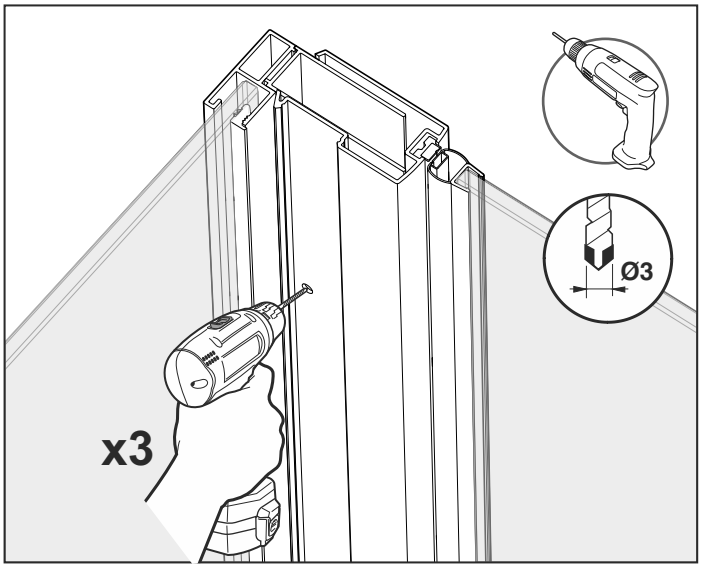

36

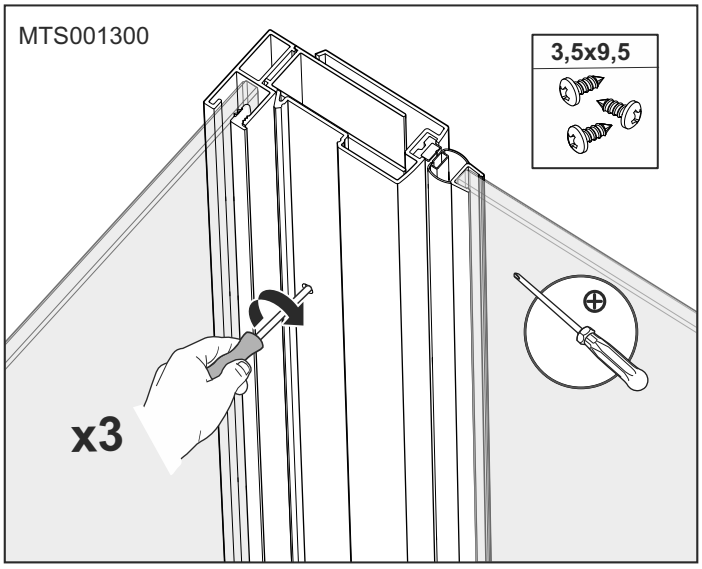

37

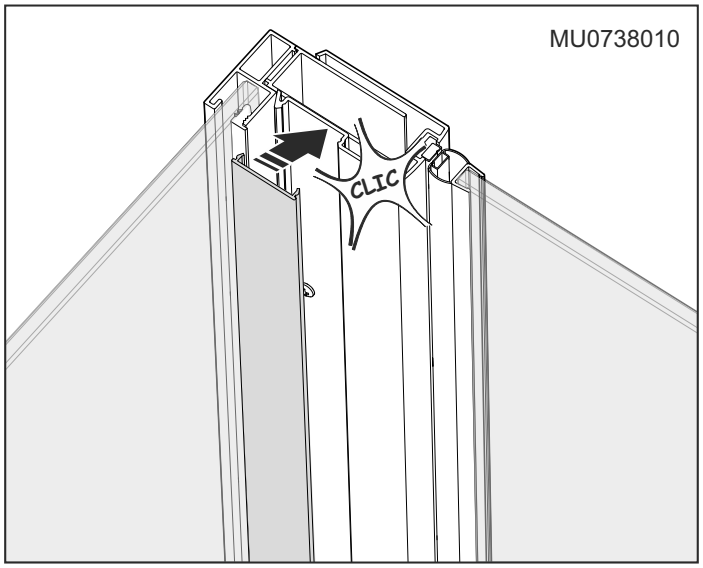

38

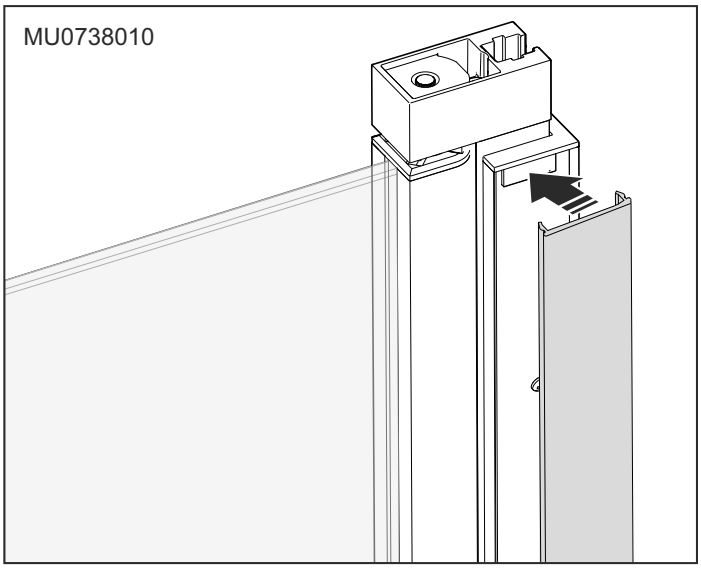

39

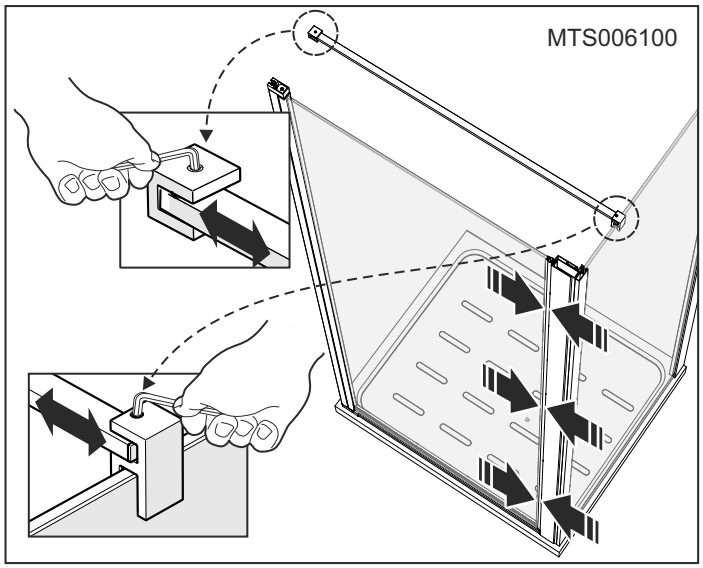

40

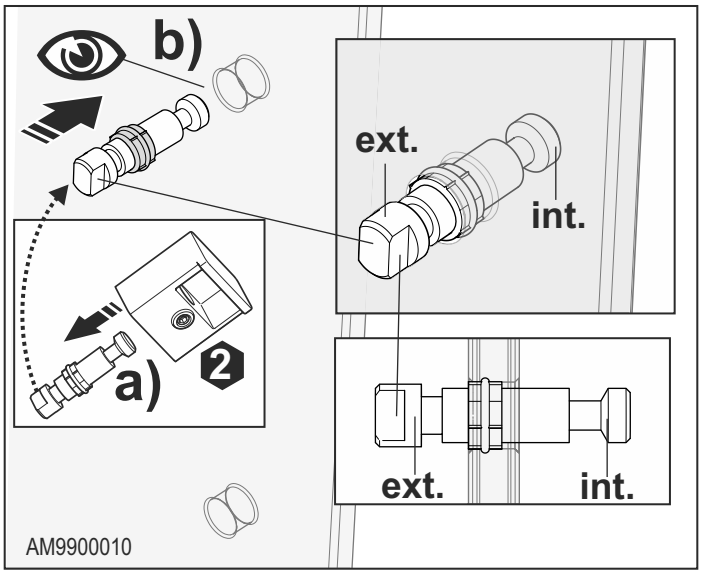

41

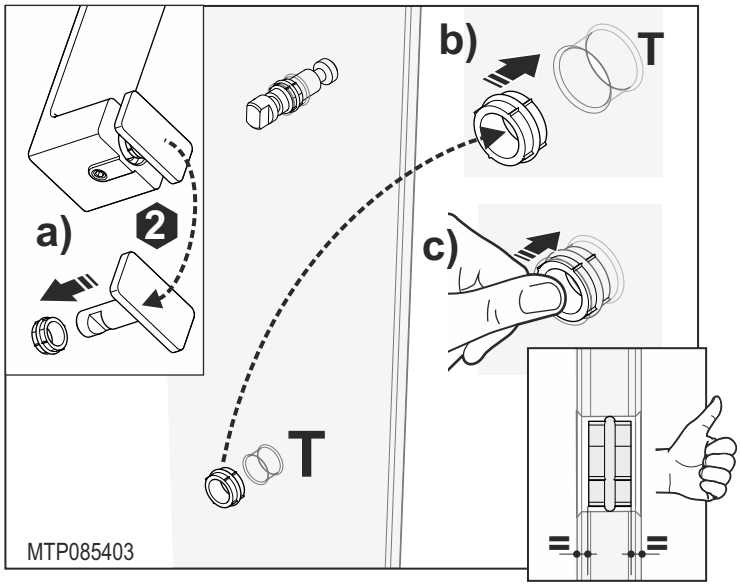

42

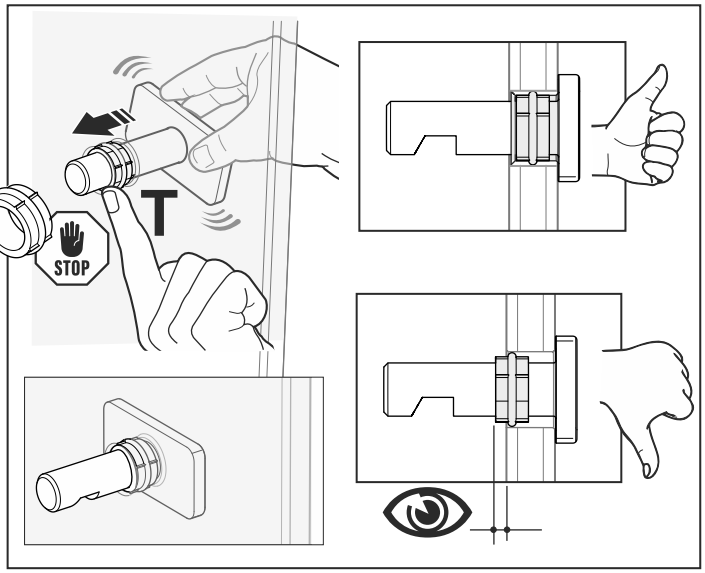

43

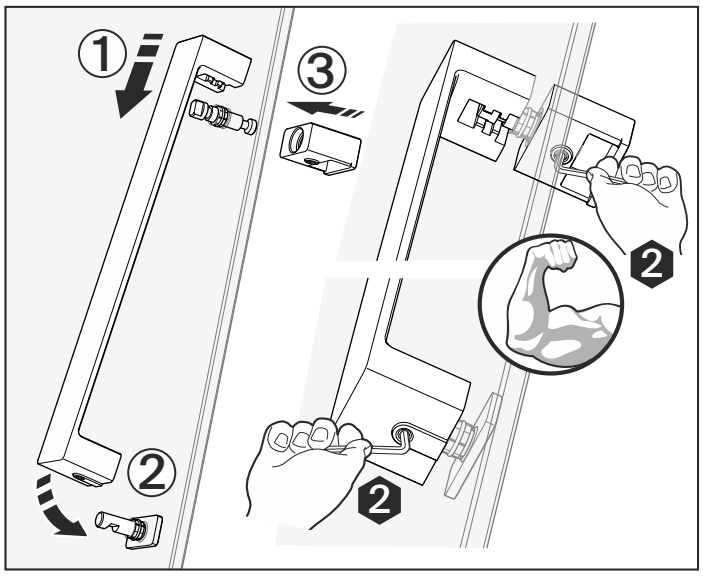

44

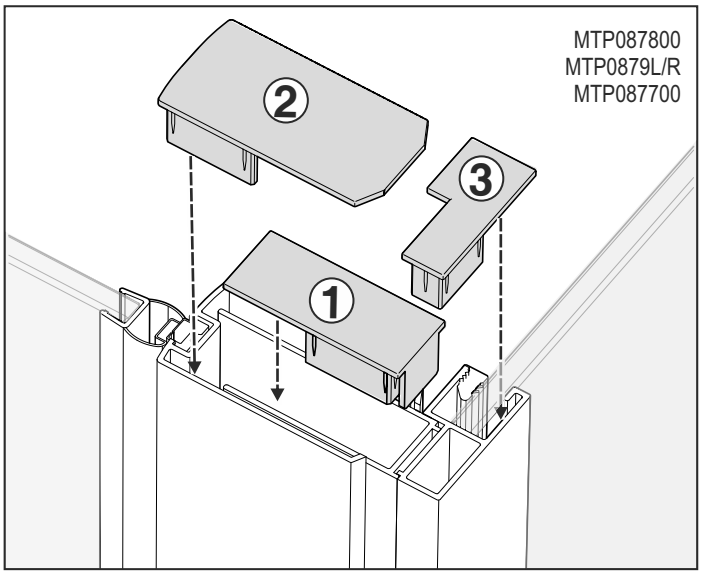

45

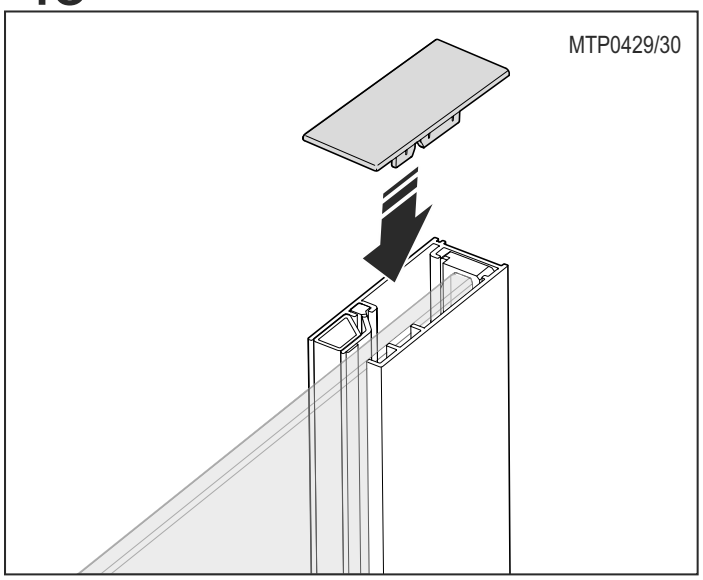

46

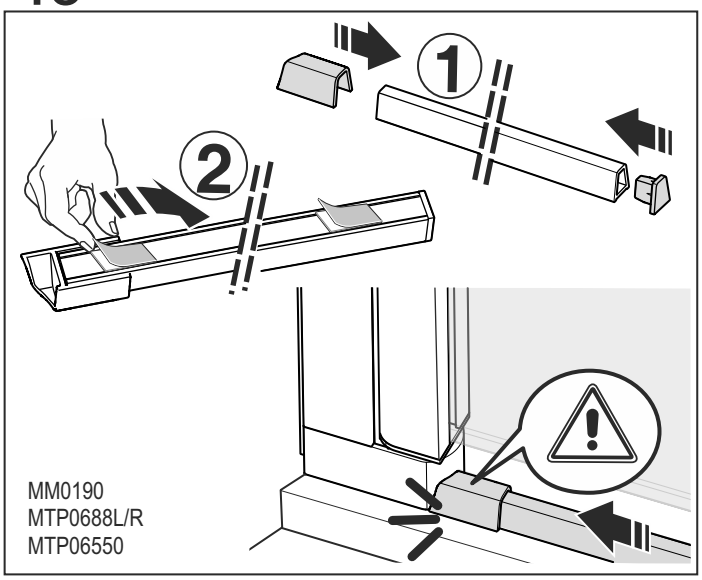

47

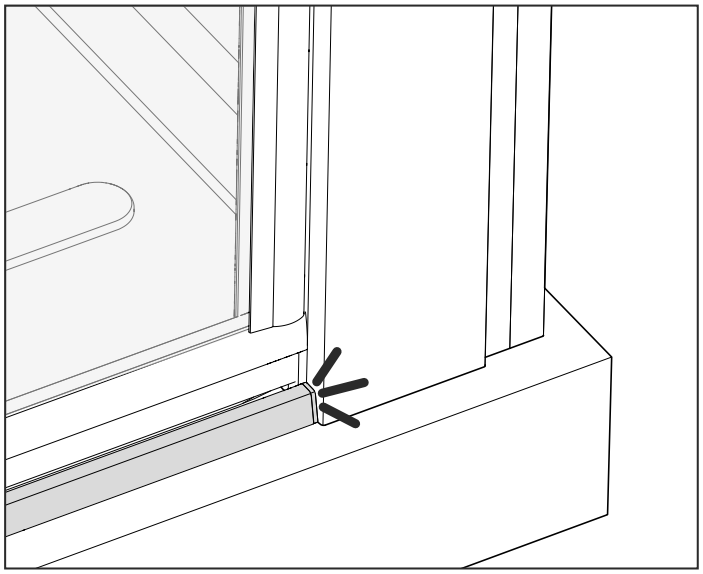

48

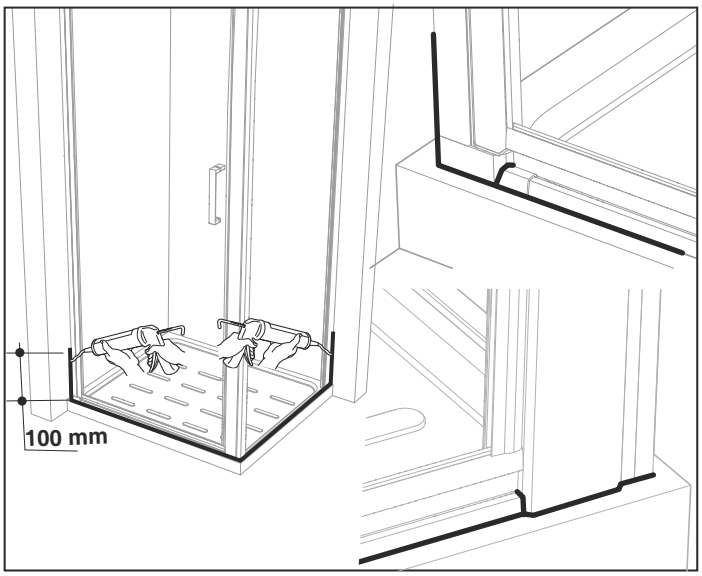

Roca Sanitario, S.A.U.
Avda Diagonal, 513
08029 Barcelona - España
roca.es

Línea de atención al cliente
Servicio Técnico Sanitario

+34 933 661 266

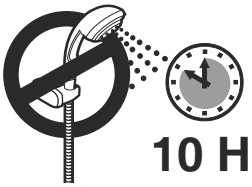

MTG1170