Victoria Plus

L4-E

AM12D...

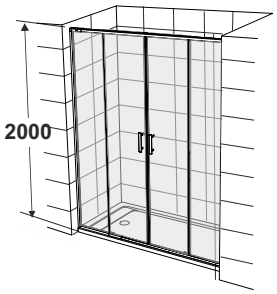

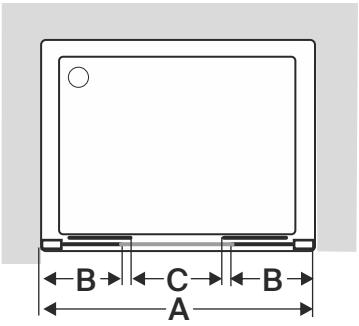

L4-E	A		C		B
	min	máx.	min	máx.	
1600	1520	1620	590	690	370
1700	1621	1720	640	740	395
1800	1721	1820	690	790	420
1900	1821	1920	690	790	470
2000	1921	2020	690	790	520

Roca

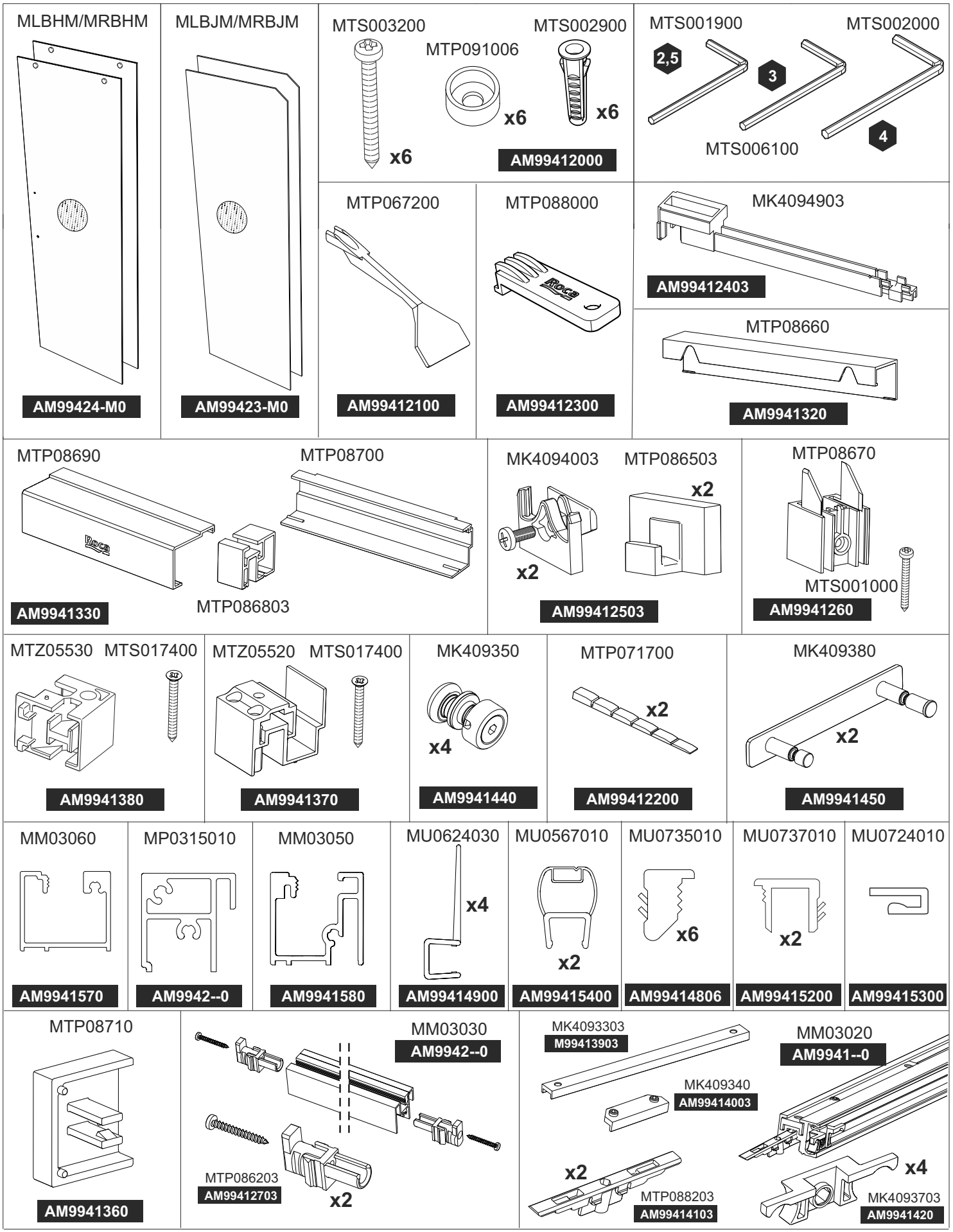
MLBHM/MRBHM
AM99424-M0
MLBJM/MRBJM
AM99423-M0
MTS003200
x6
MTP091006
x6
MTS002900
x6
AM99412000
MTS001900
2,5
3
MTS002000
4
MTS006100
MTP067200
AM99412100
MTP088000
AM99412300
MK4094903
AM99412403
MTP08660
AM9941320
MTP08690
MTP08700
AM9941330
MTP086803
MK4094003
x2
MTP086503
x2
AM99412503
MTP08670
MTS001000
AM9941260
MTZ05530
MTS017400
AM9941380
MTZ05520
MTS017400
AM9941370
MK409350
x4
AM9941440
MTP071700
x2
AM99412200
MK409380
x2
AM9941450
MM03060
AM9941570
MP0315010
AM9942--0
MM03050
AM9941580
MU0624030
x4
AM99414900
MU0567010
x2
AM99415400
MU0735010
x6
AM99414806
MU0737010
x2
AM99415200
MU0724010
AM99415300
MTP08710
AM9941360
MM03030
AM9942--0
MTP086203
AM99412703
x2
MK4093303
M99413903
MM03020
AM9941--0
MK409340
AM99414003
x2
MTP088203
AM99414103
x4
MK4093703
AM9941420
x1
5m

1

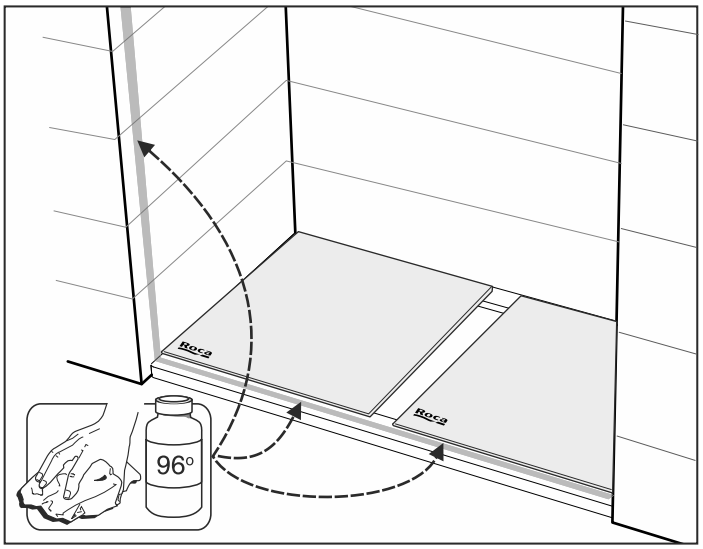
Roca
Roca
96º

2

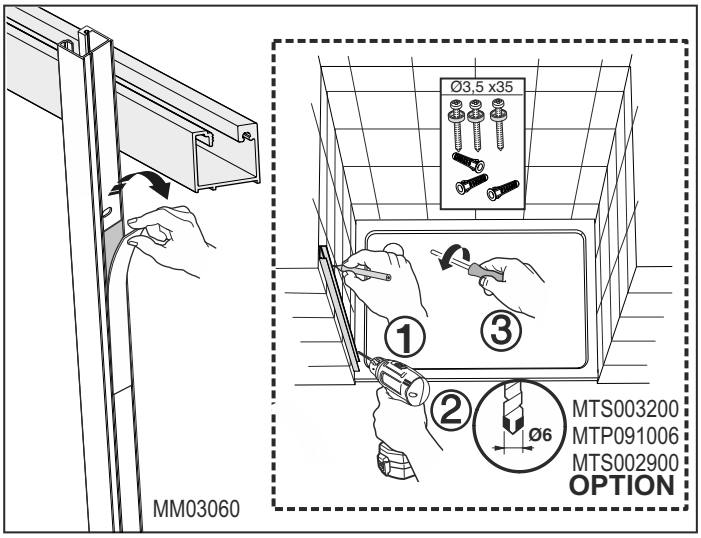
Ø3,5 x35
1
3
2
Ø6
MTS003200
MTP091006
MTS002900
OPTION
MM03060

3

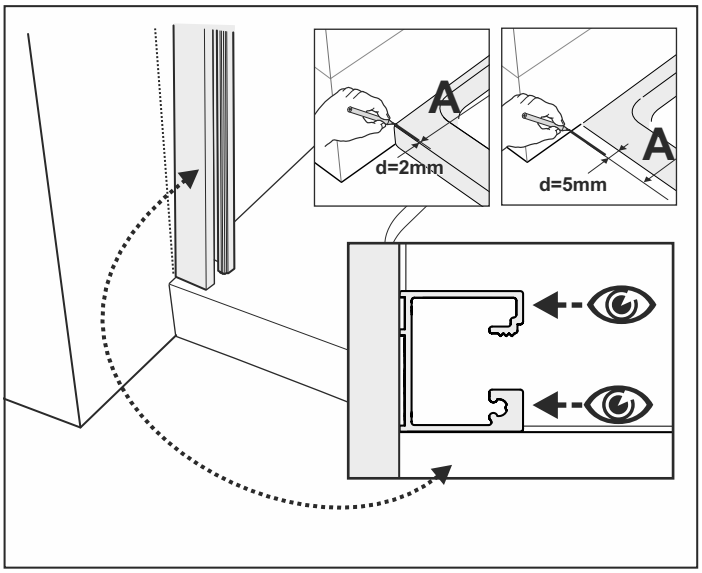
A
d=2mm
A
d=5mm

4

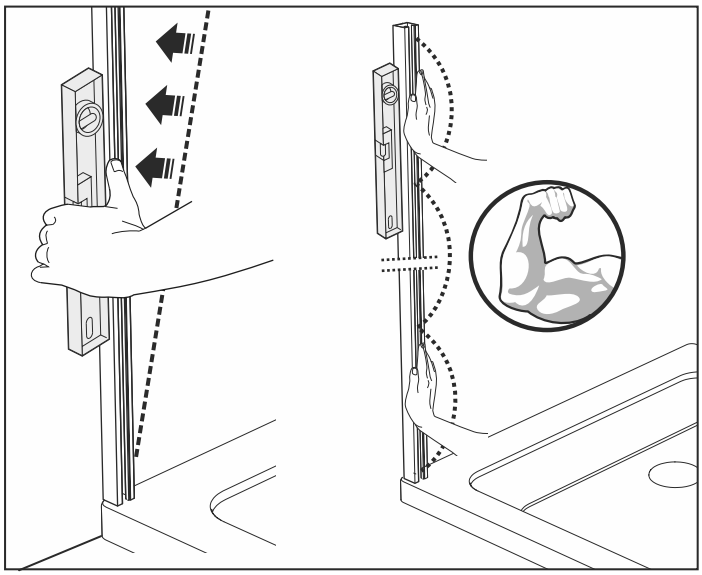

5

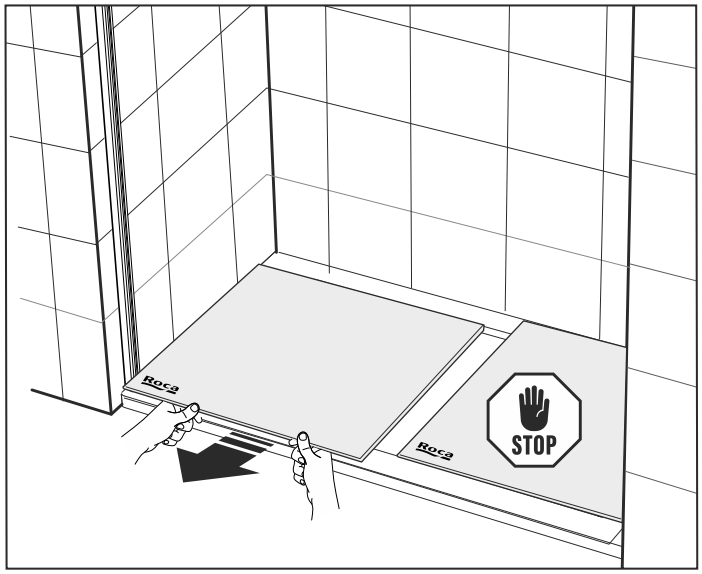
Roca
Roca
STOP

6

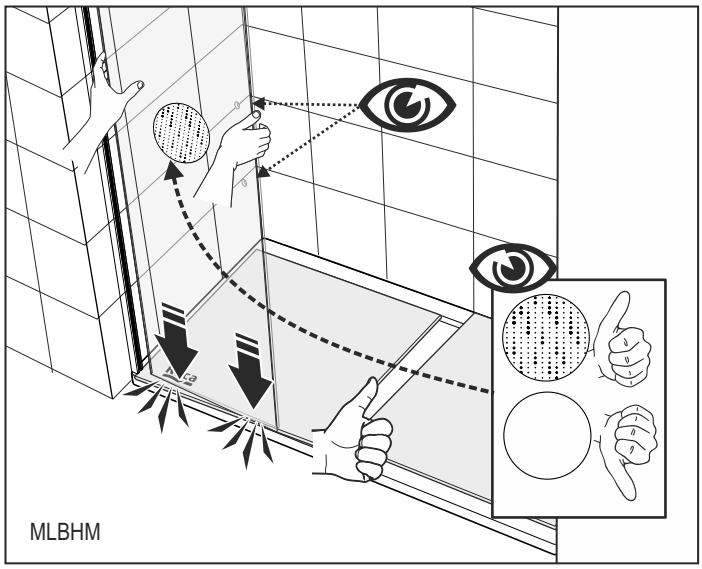
Roca
MLBHM

7

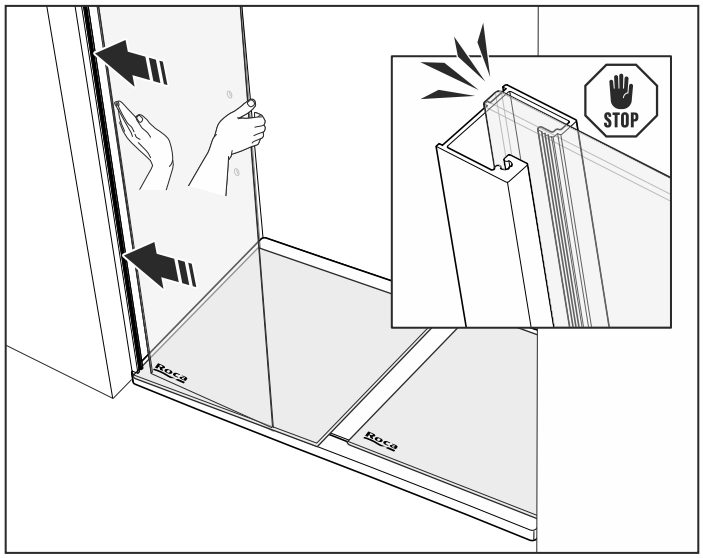
STOP
Roca
Roca

8

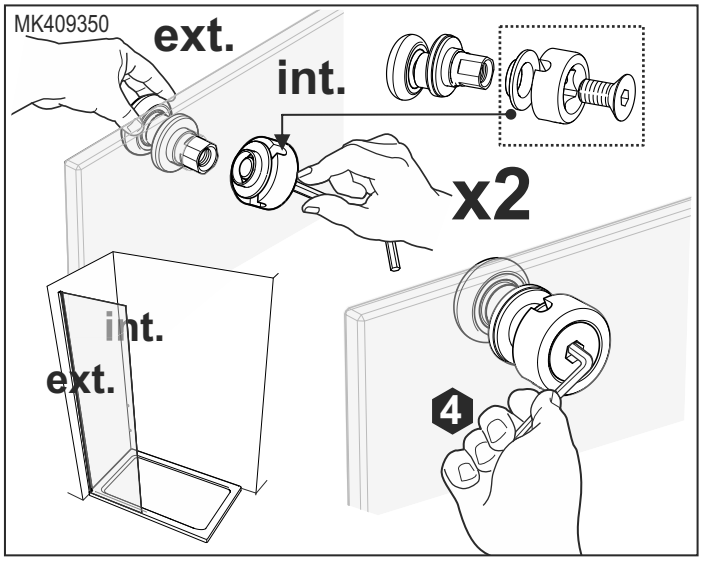
MK409350
ext.
int.
x2
int.
ext.
4

9

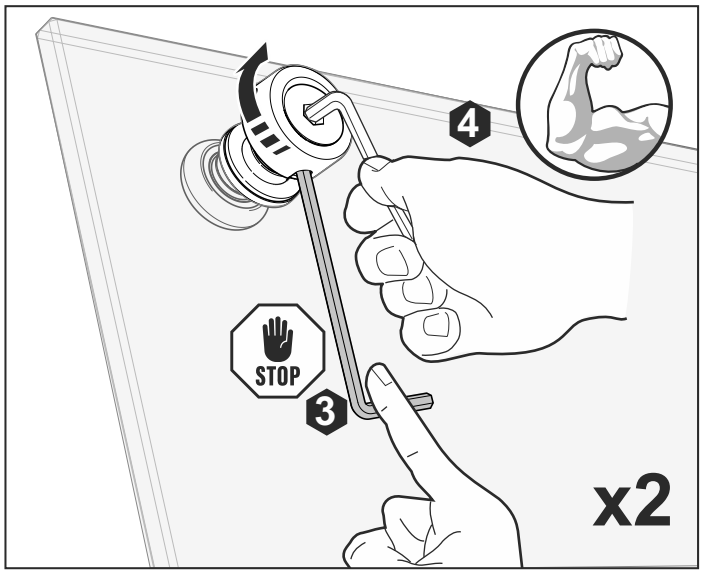
4
STOP
3
x2

10

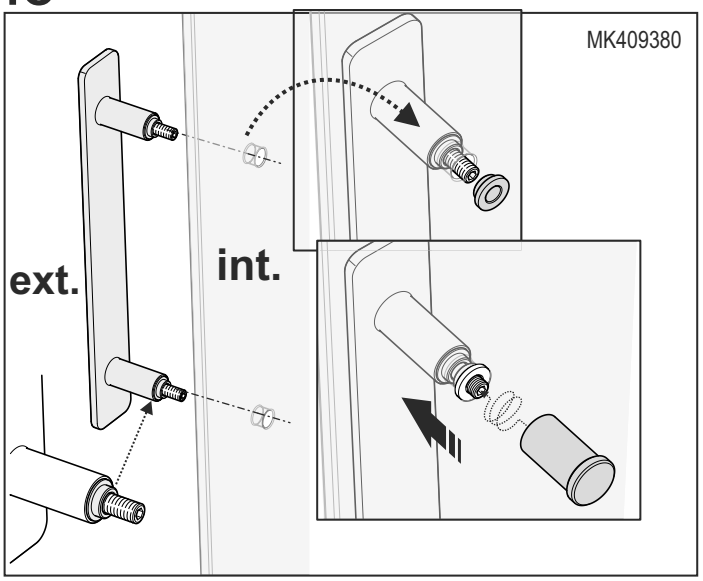
MK409380
ext.
int.

11

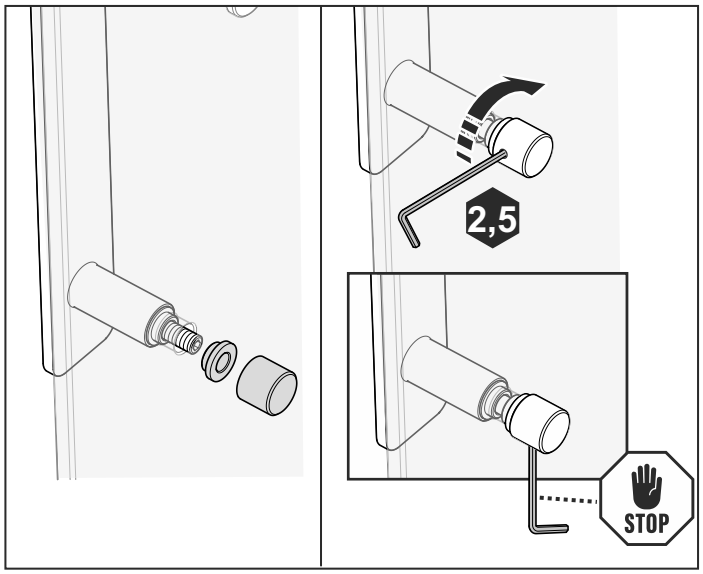
2,5
STOP

12

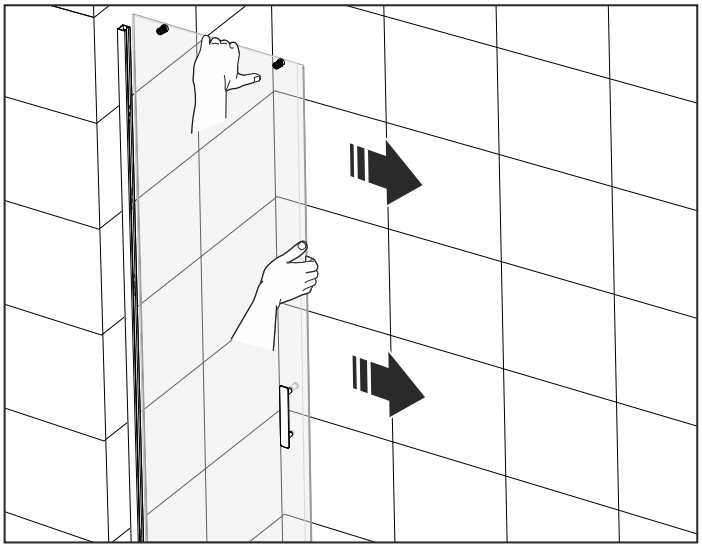

13

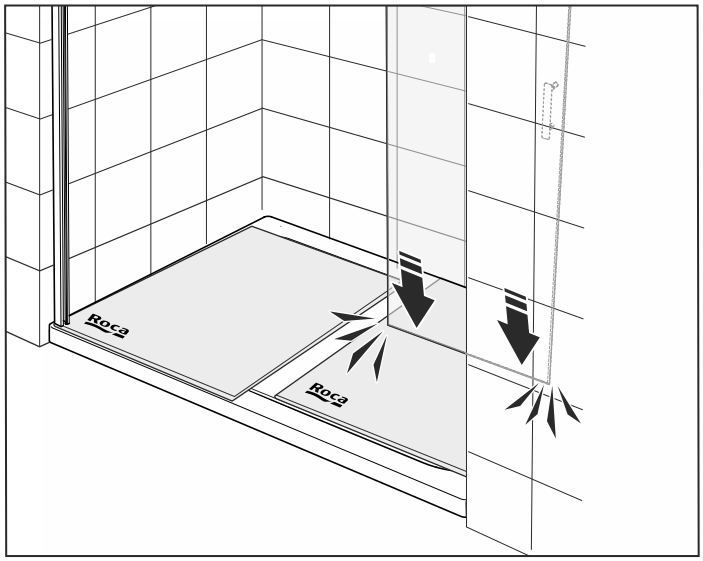

14

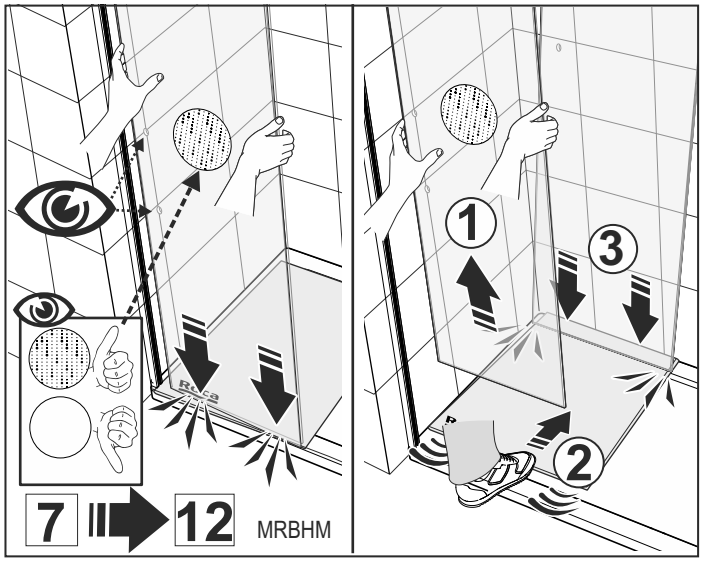

15

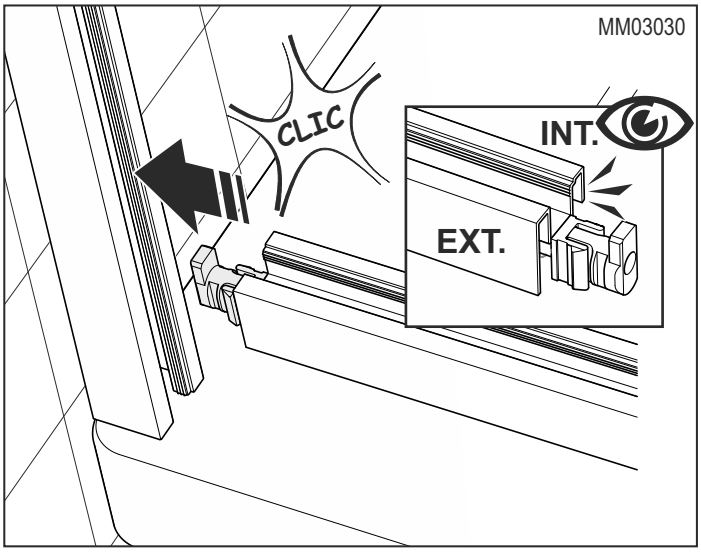

16

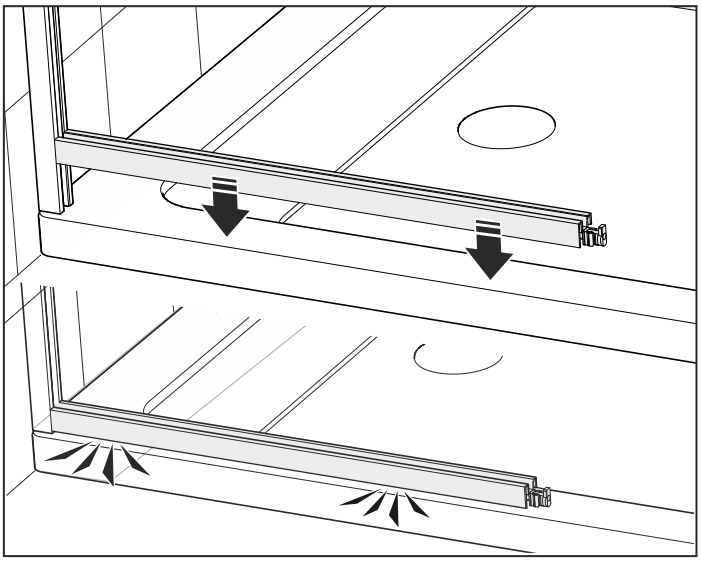

17

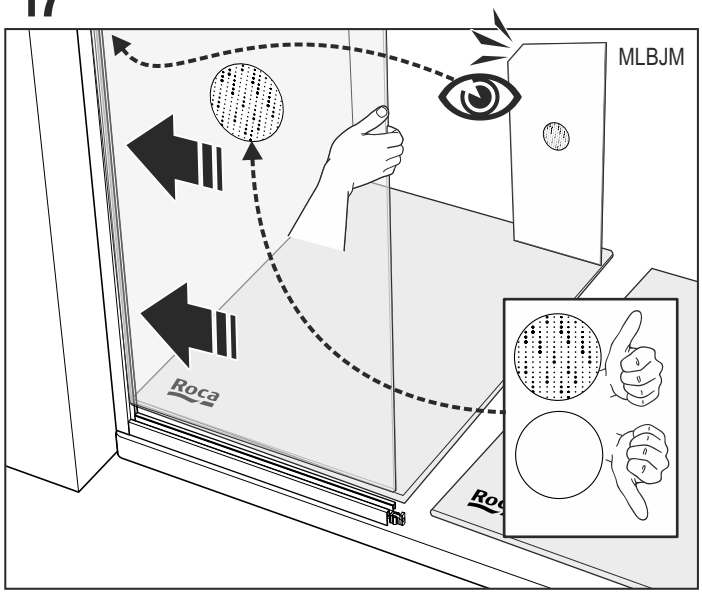

18

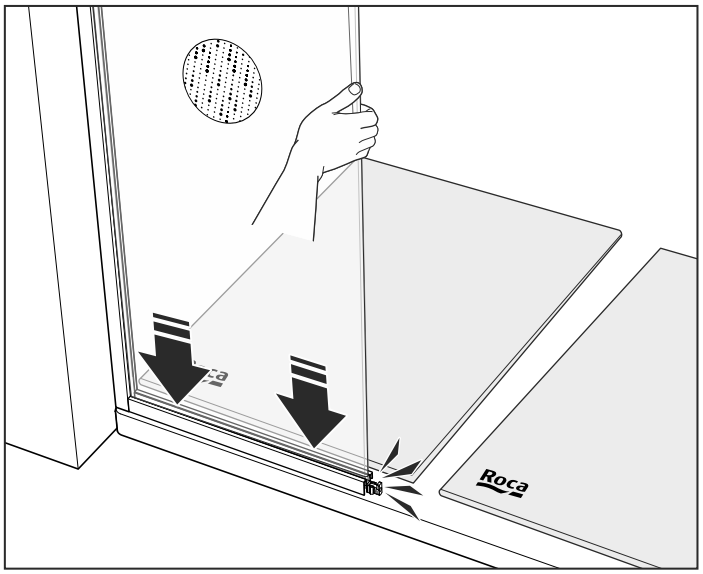

19

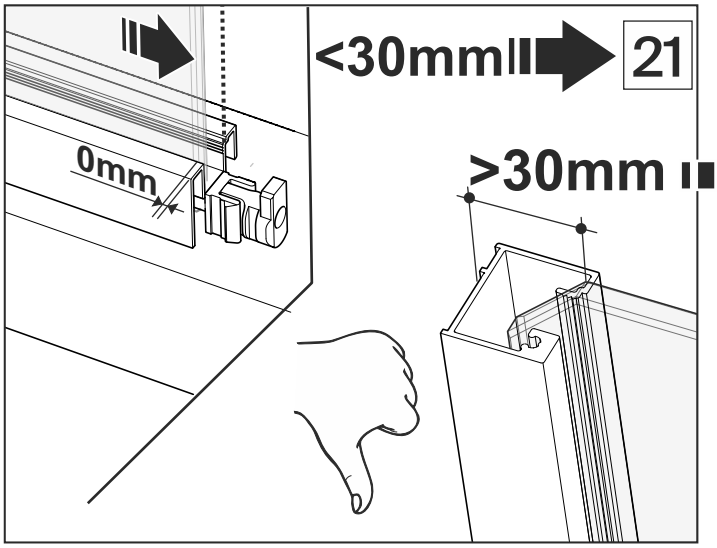

20

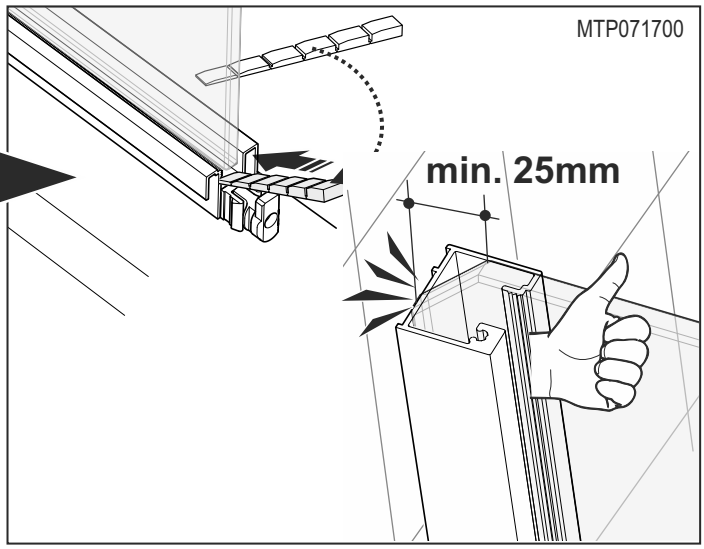

21

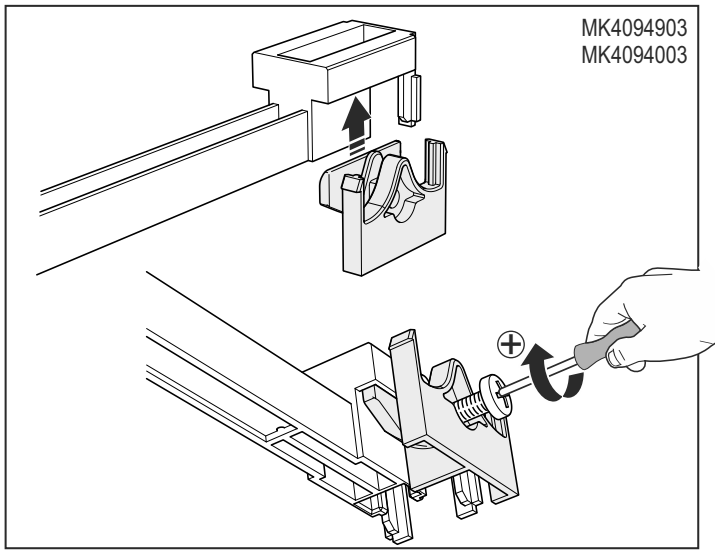

22

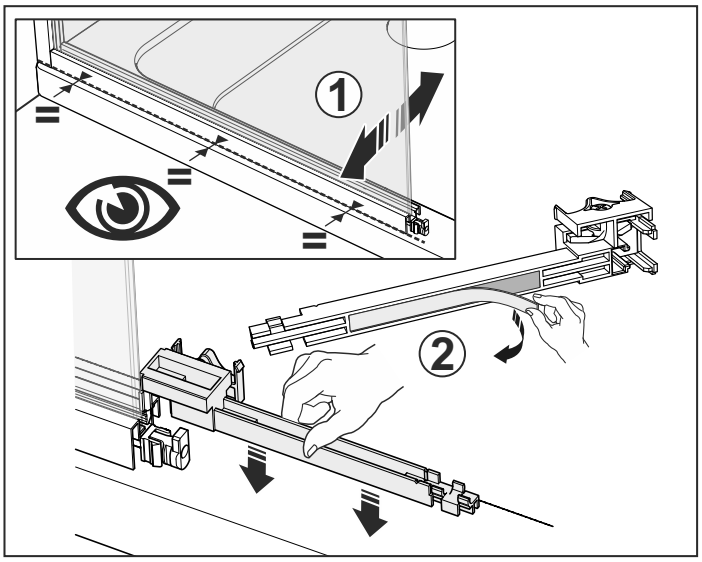

23

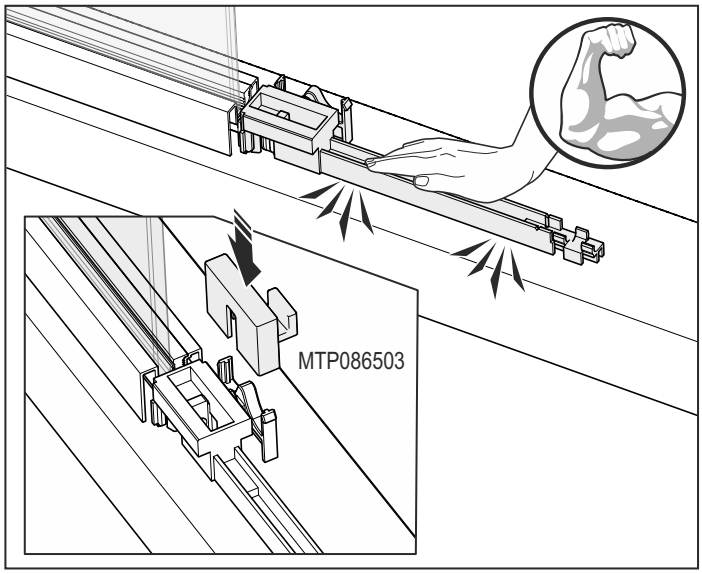

24

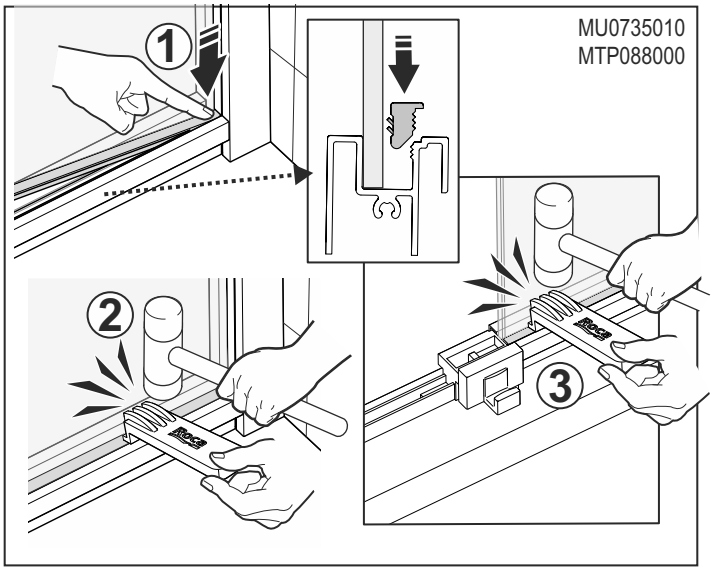

25

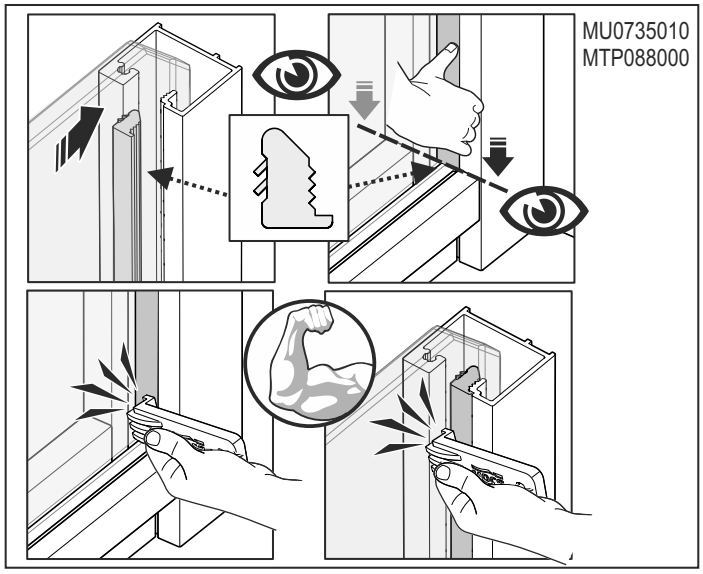

26

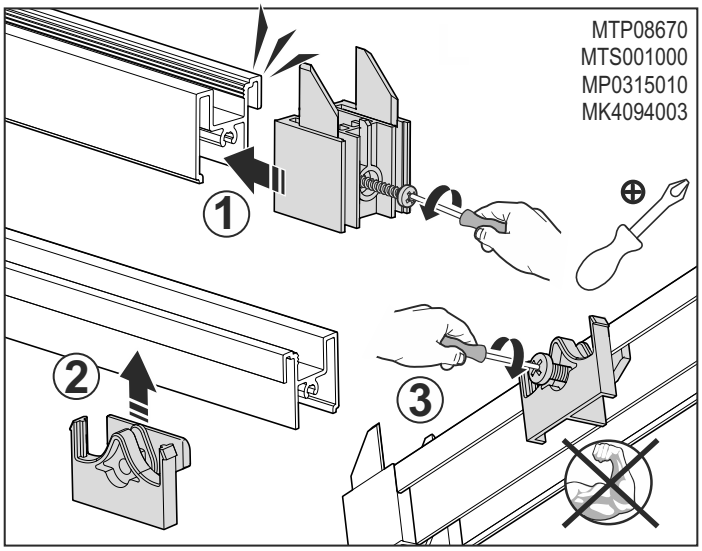

27

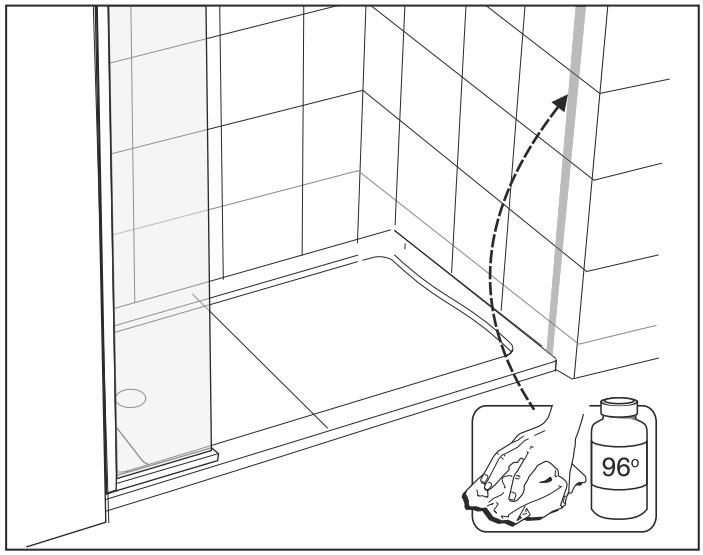

28

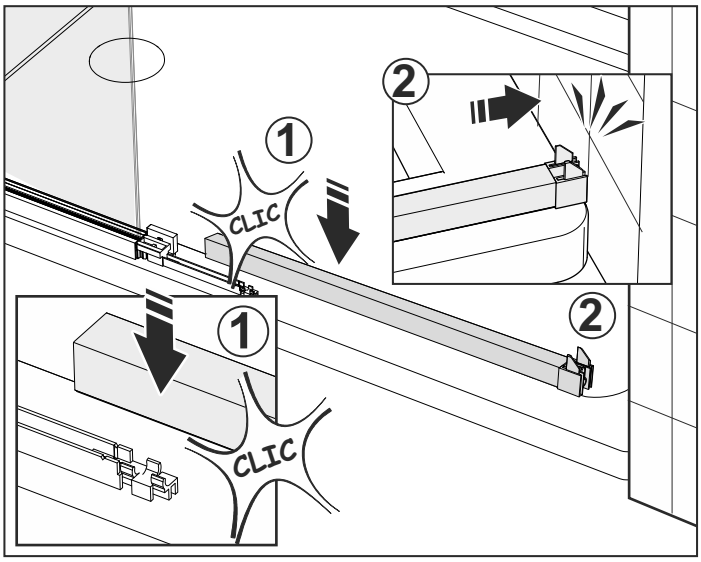

29

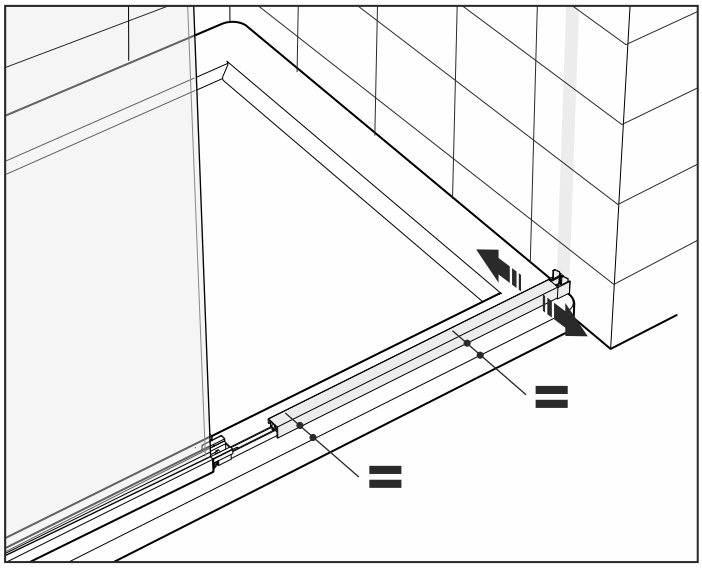

30

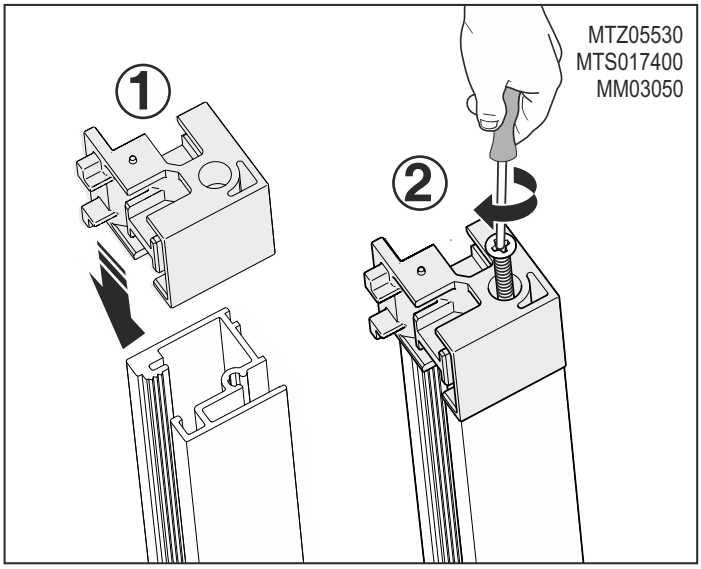

31

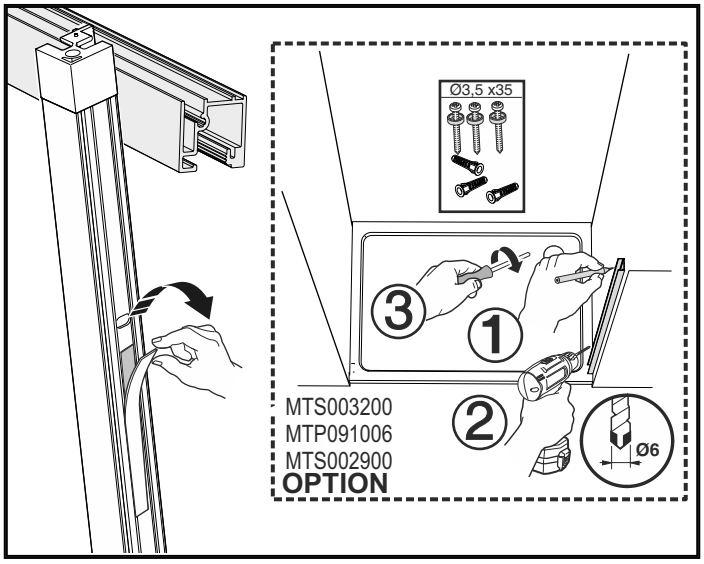

32

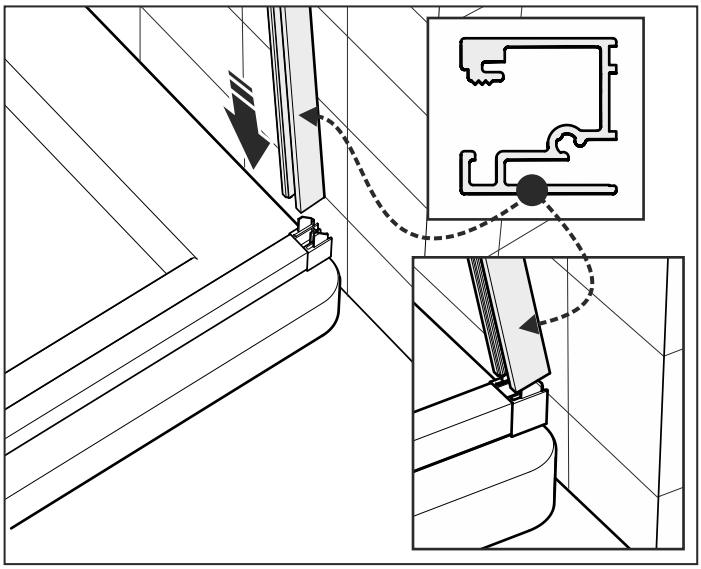

33

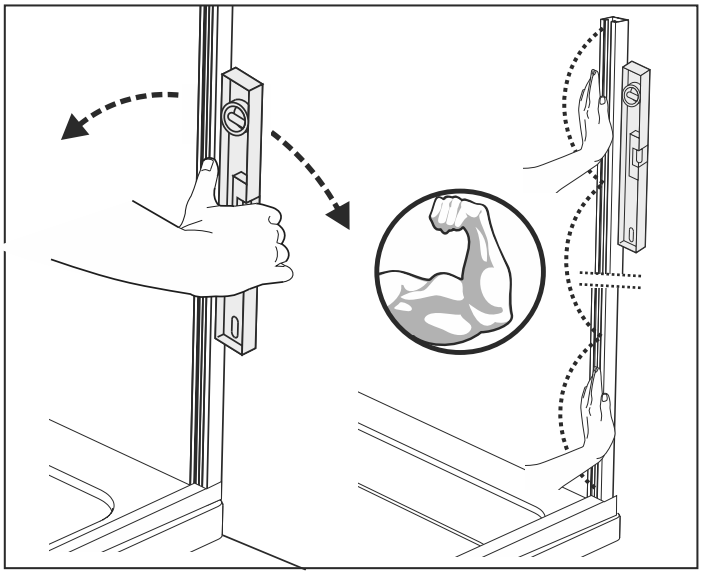

34

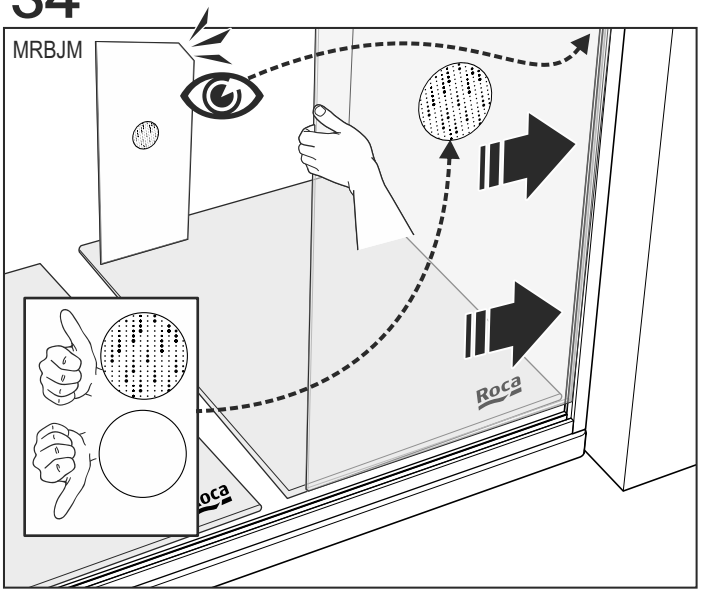

35

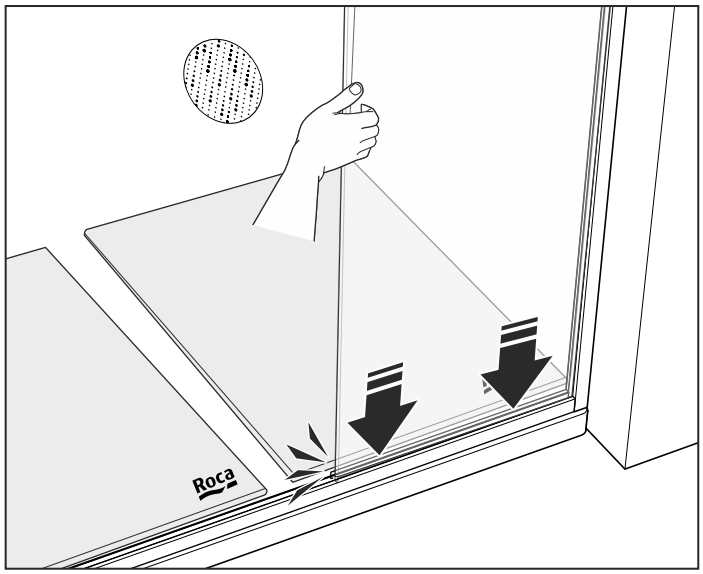

36

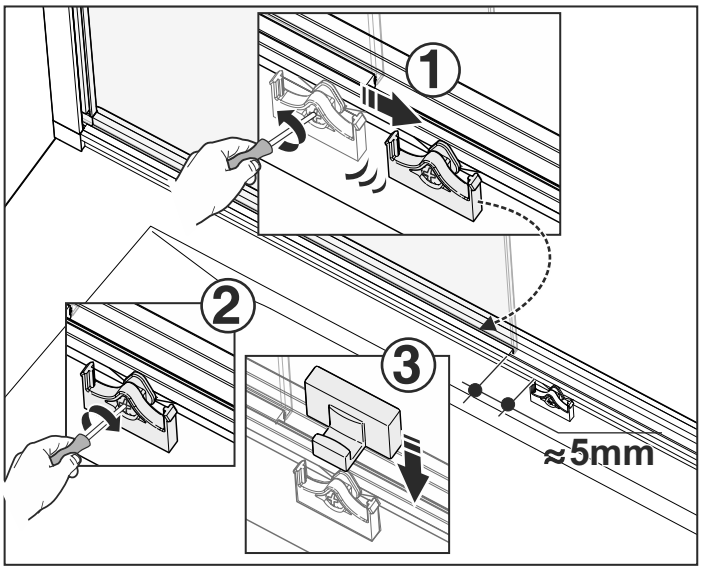

37

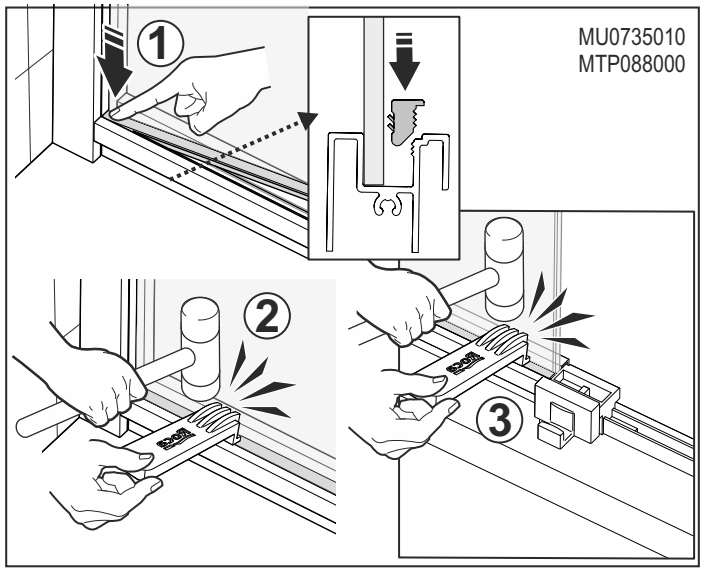

38

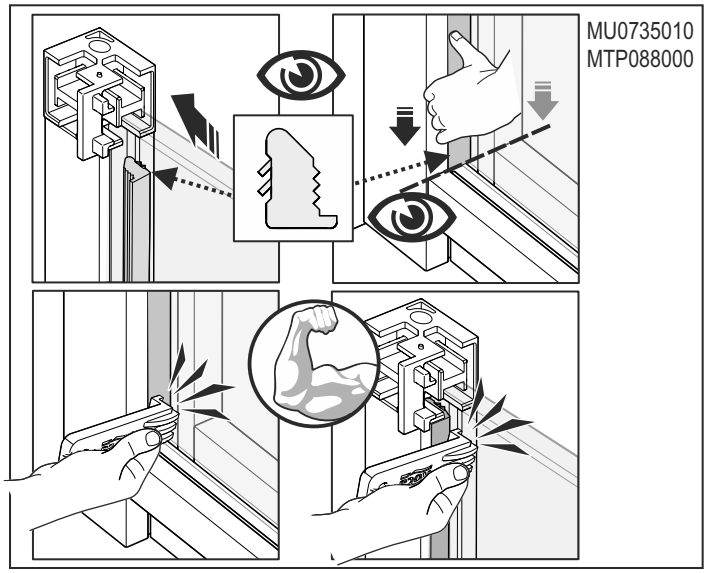

39

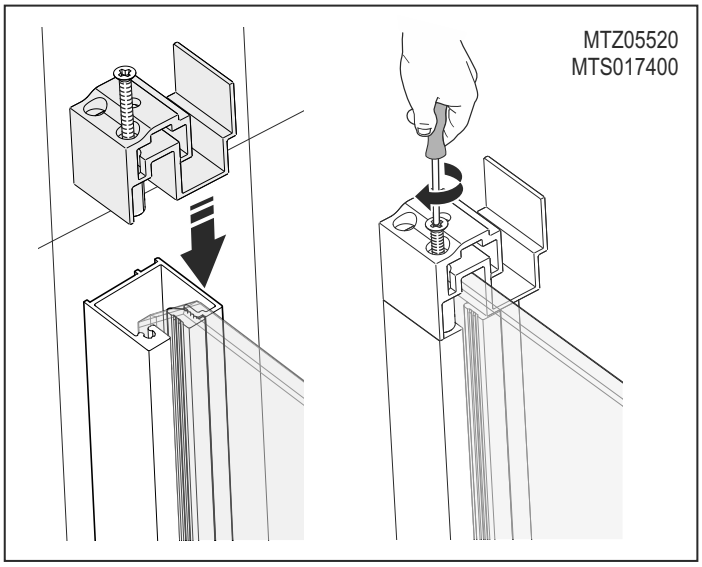

40

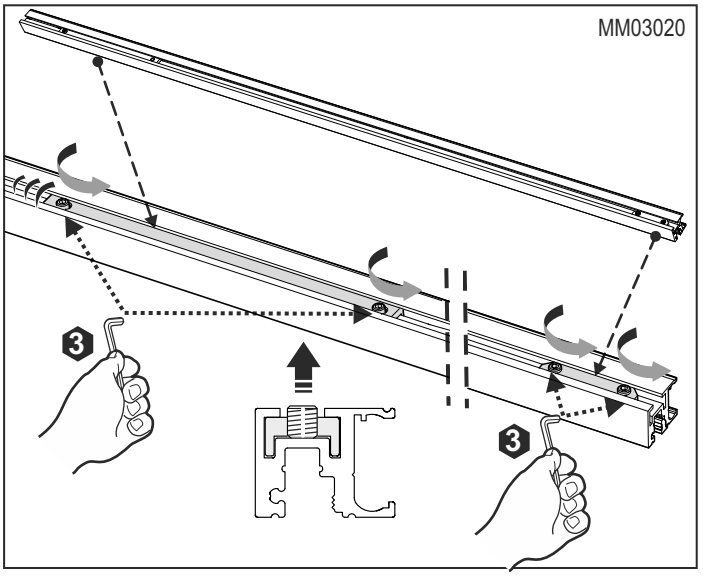

41

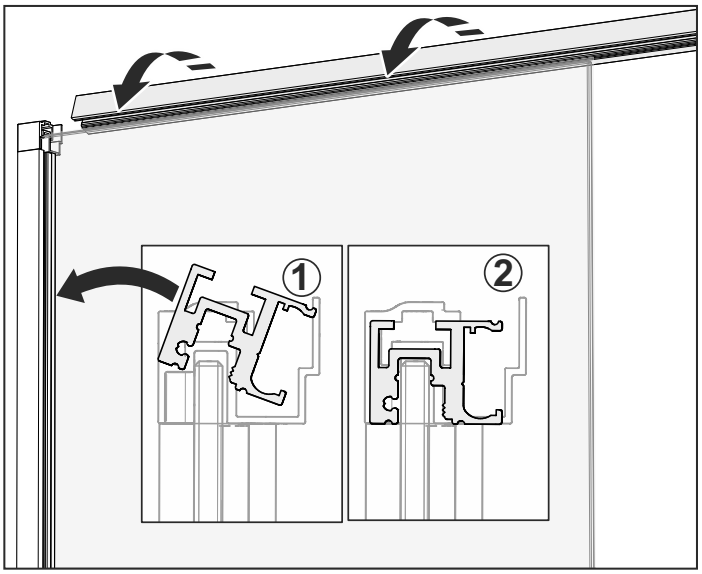

42

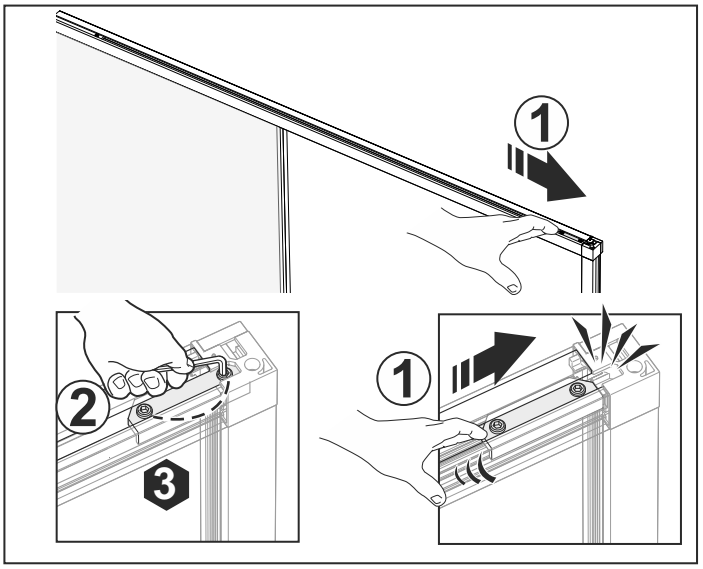

43

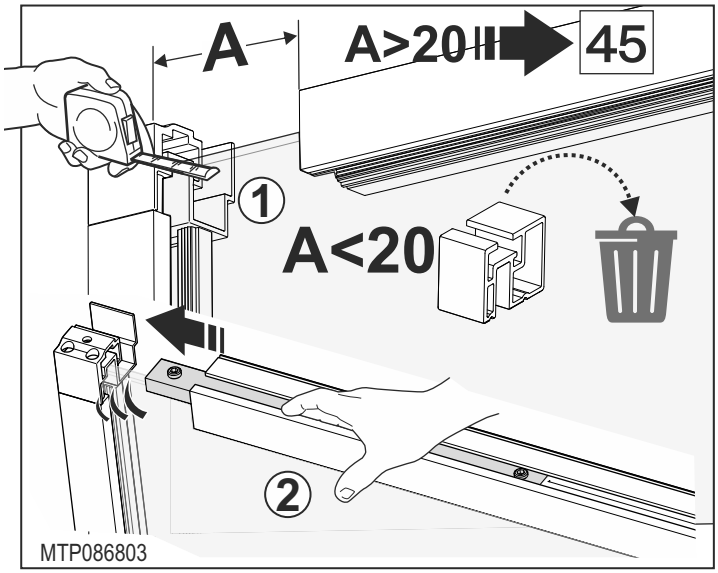

44

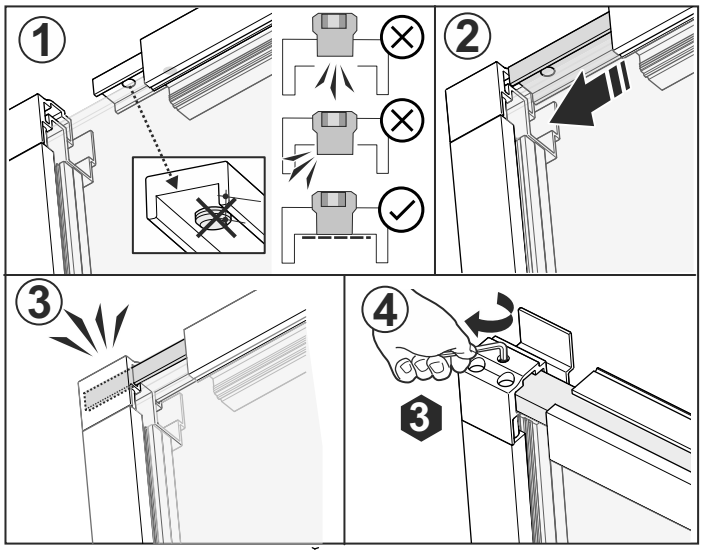

45

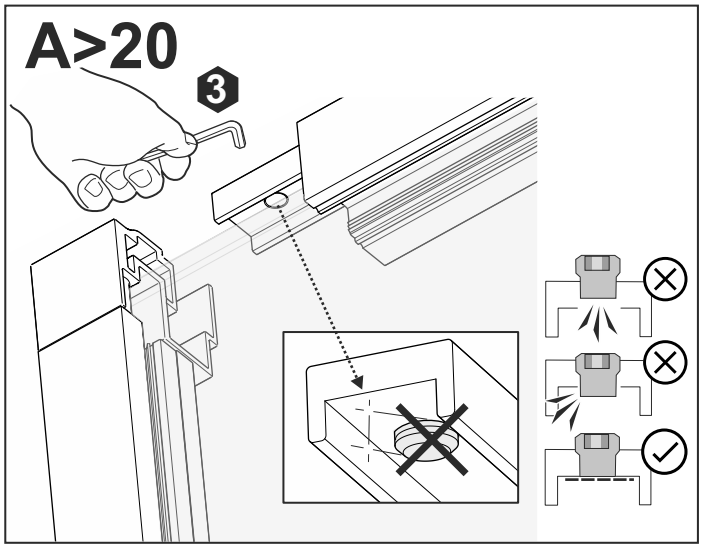

46

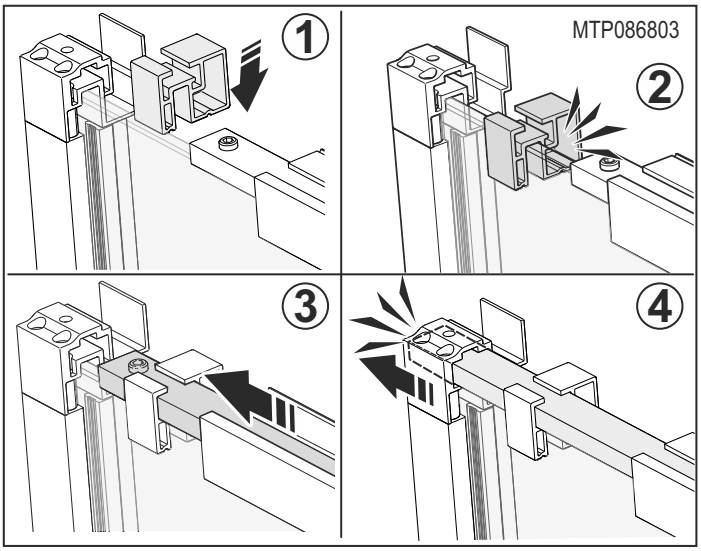

47

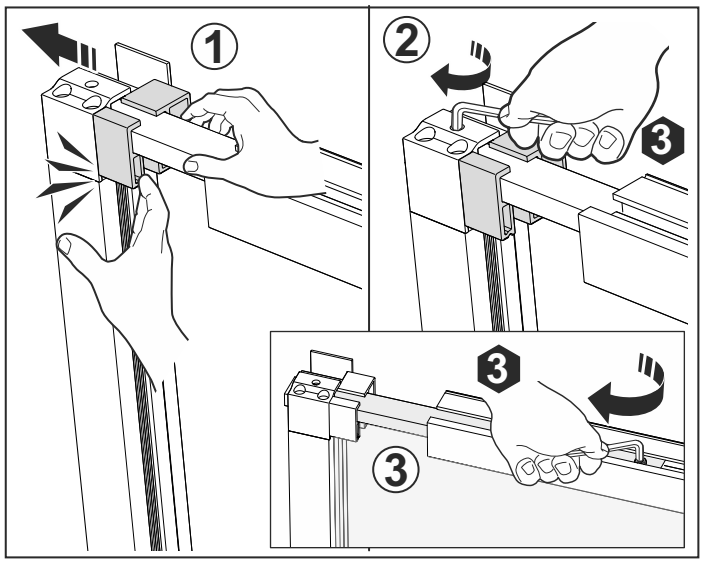

48

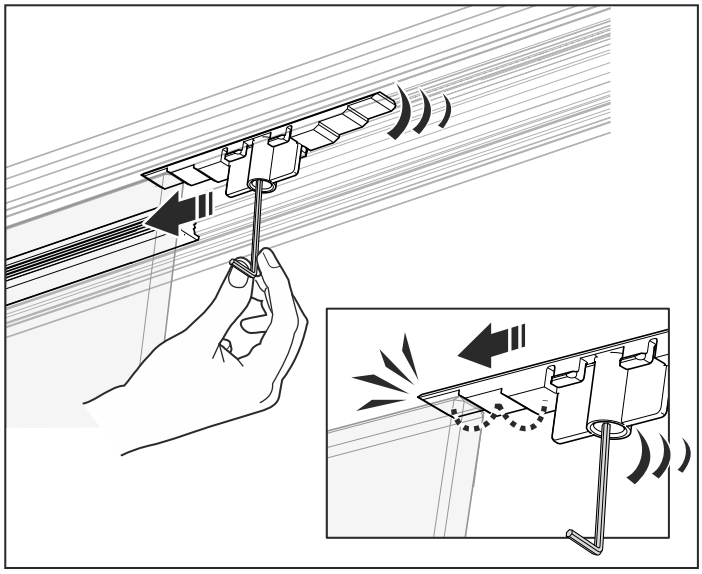

49

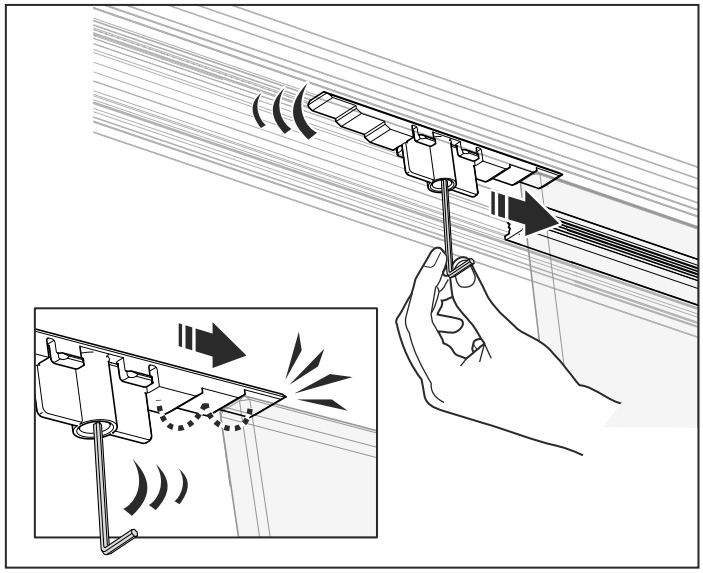

50

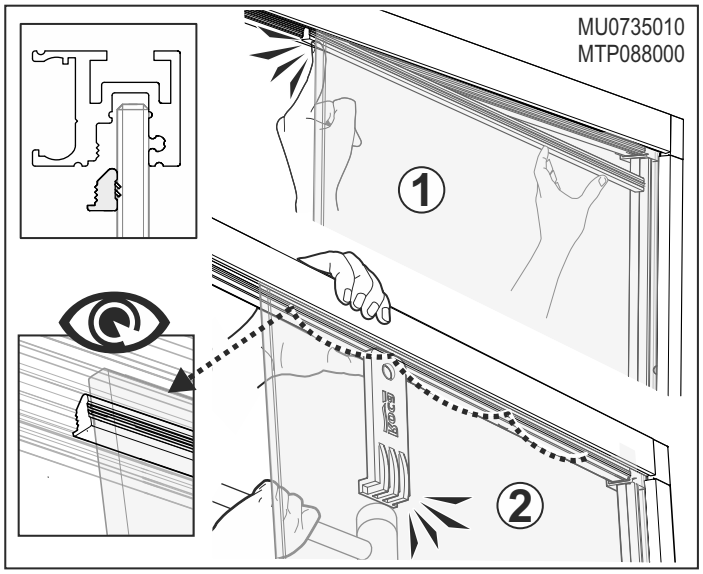

51

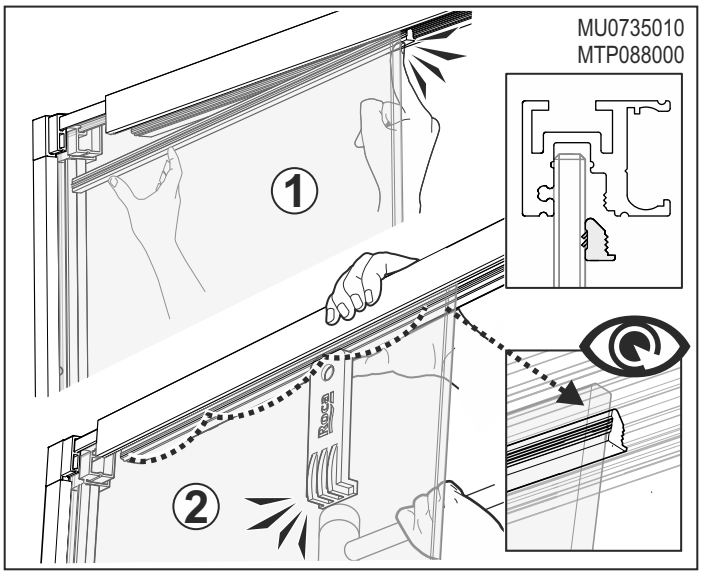

52

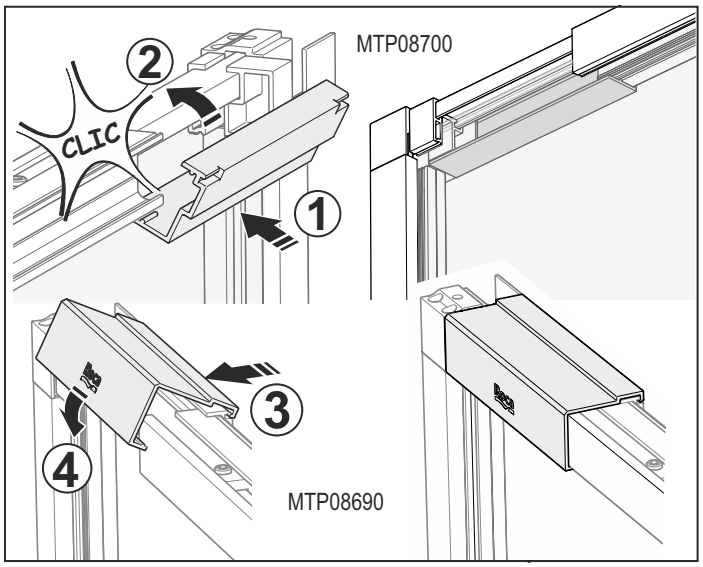

53

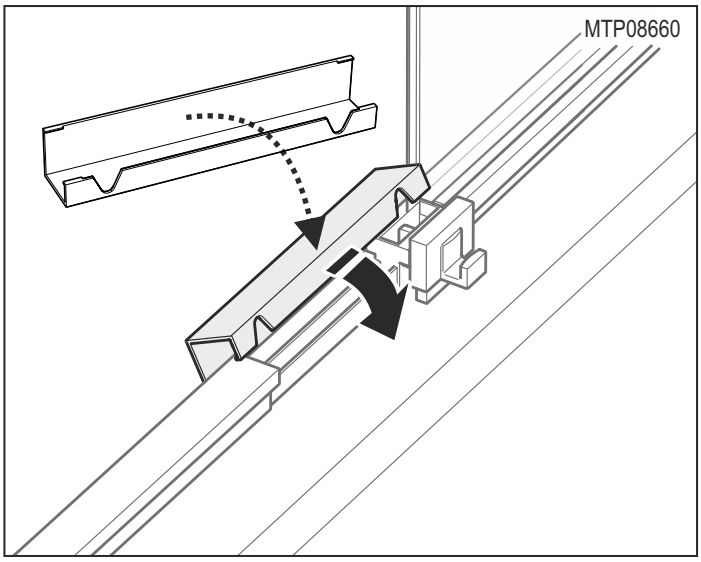

54

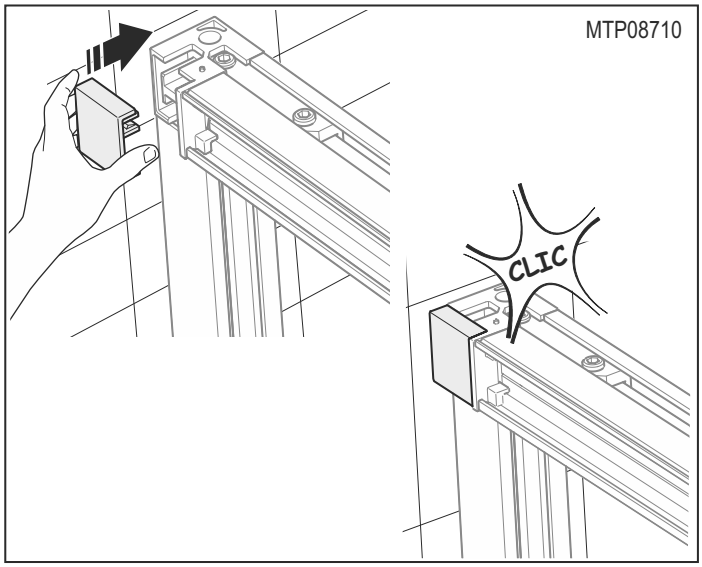

55

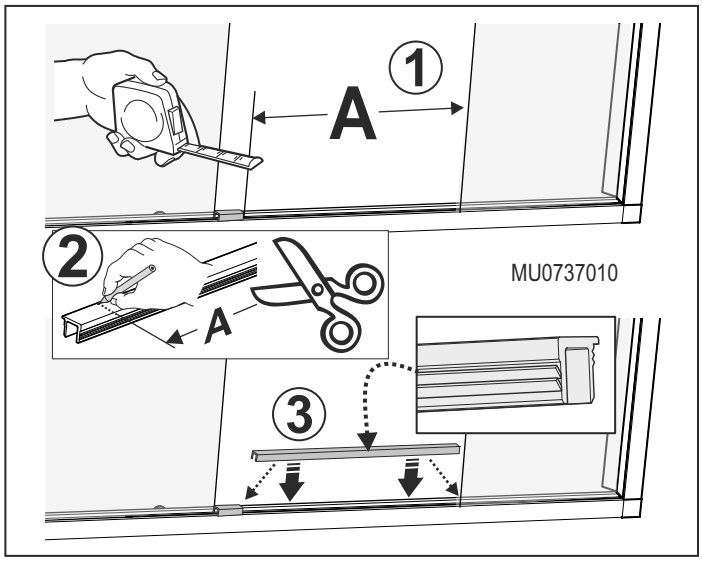

56

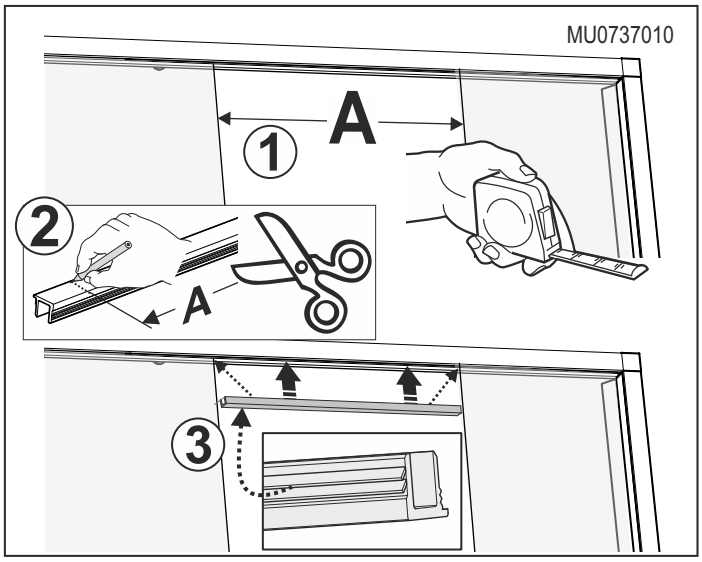

57

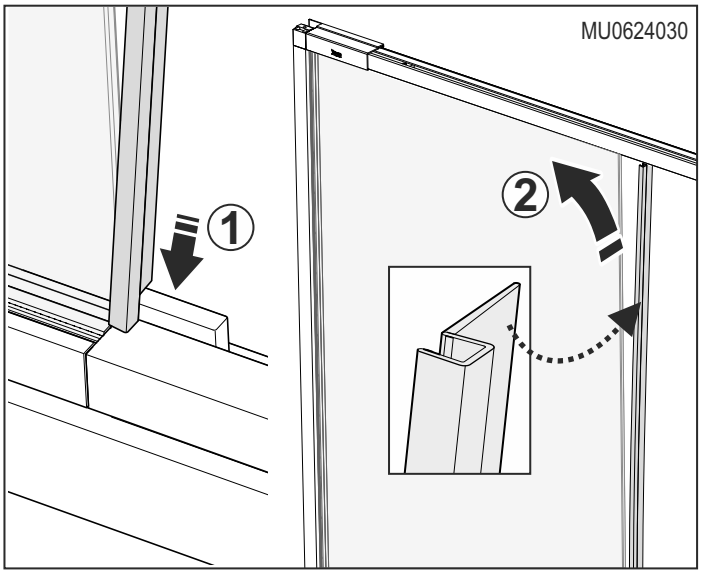

58

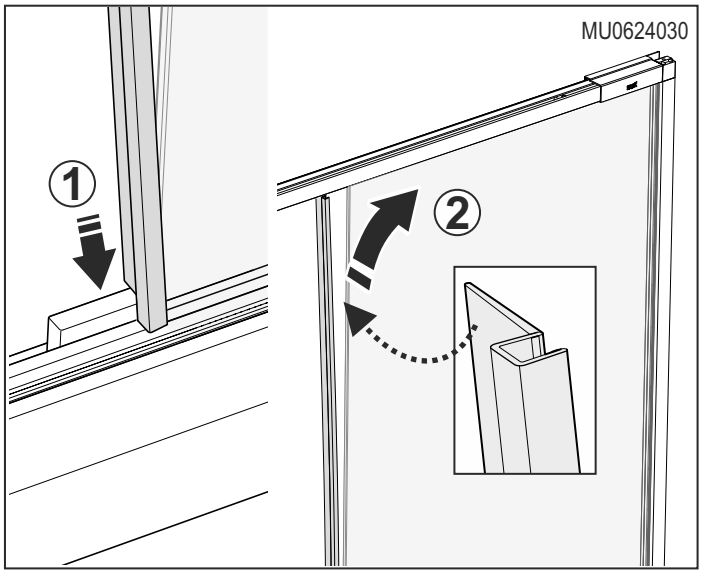

59

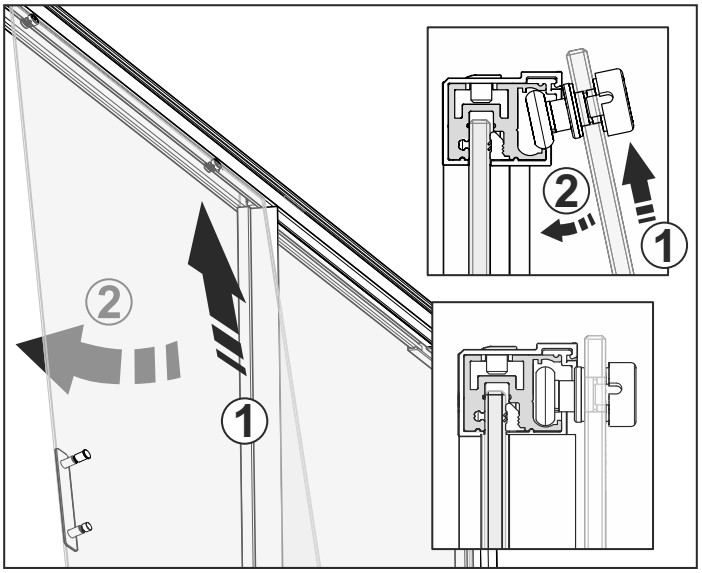

60

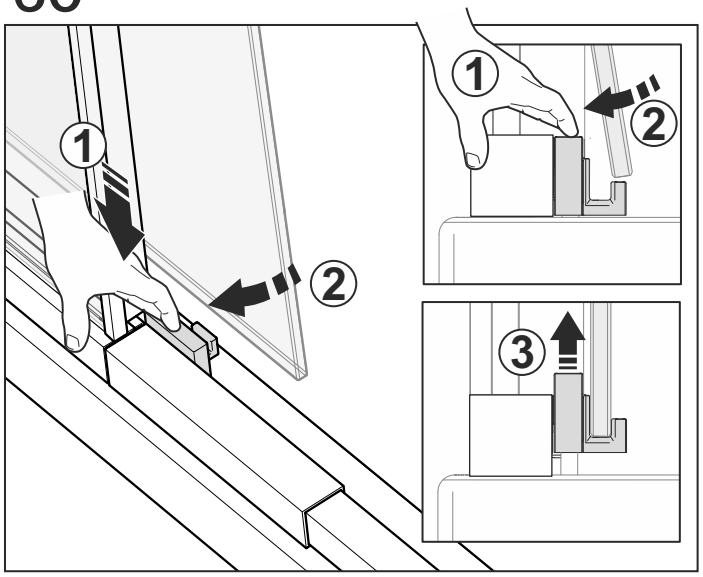

61

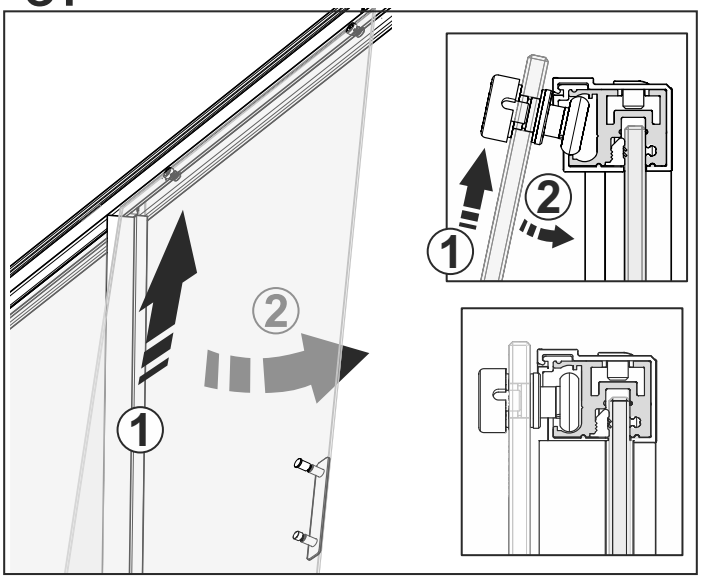

62

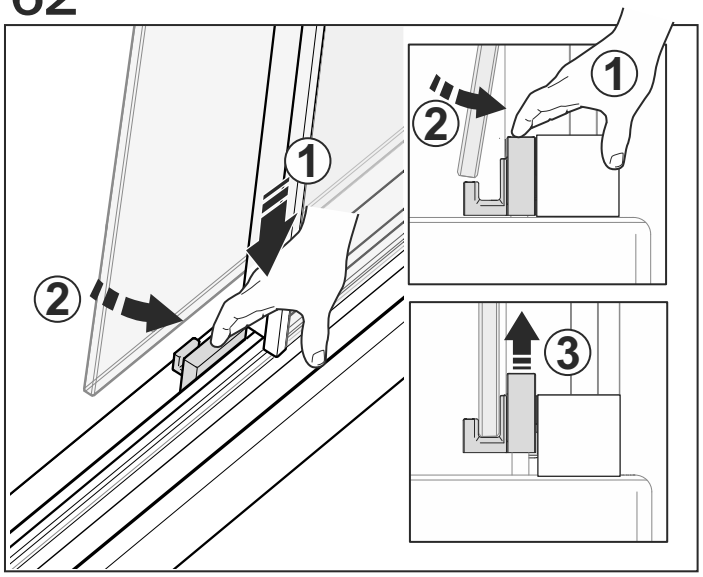

63

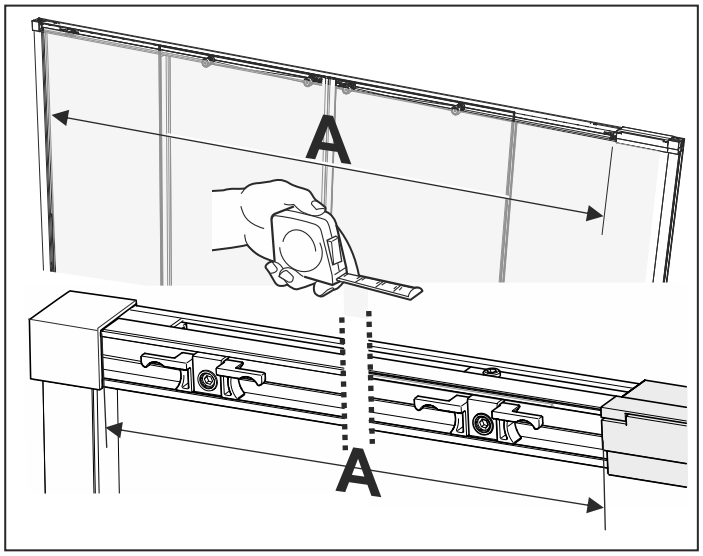

64

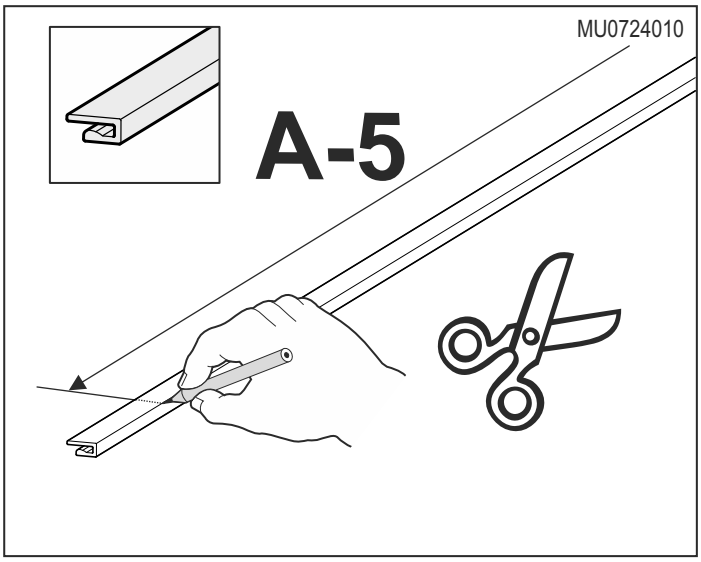

65

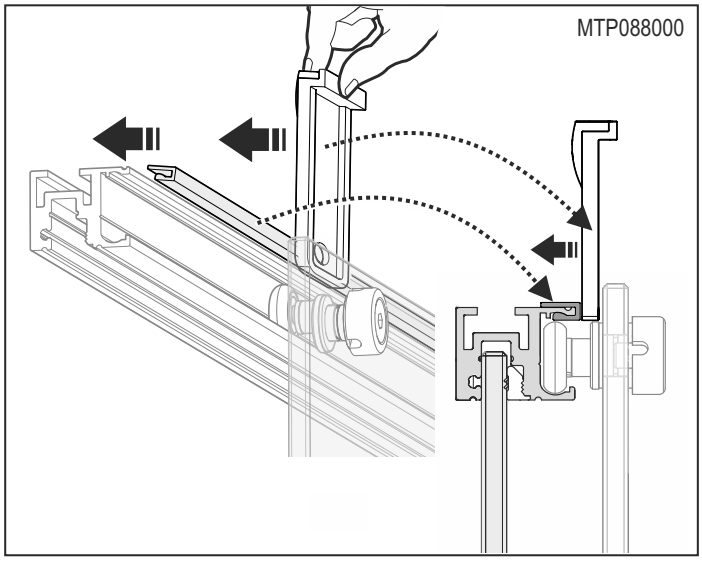

66

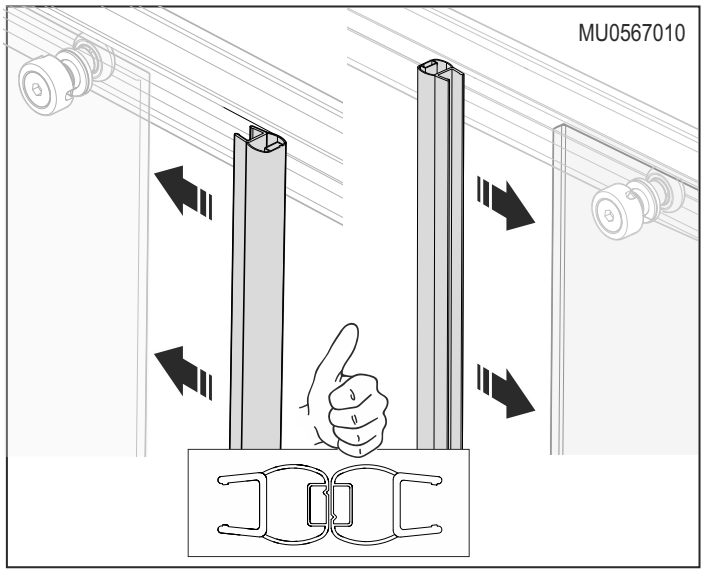

67

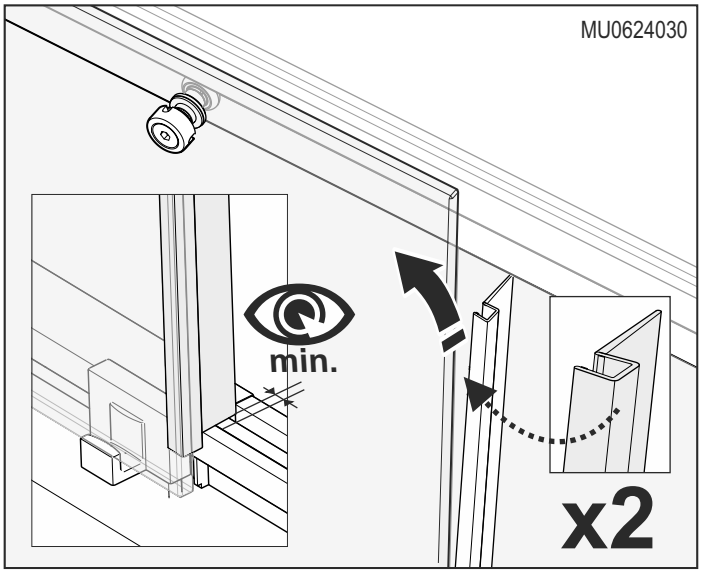

68

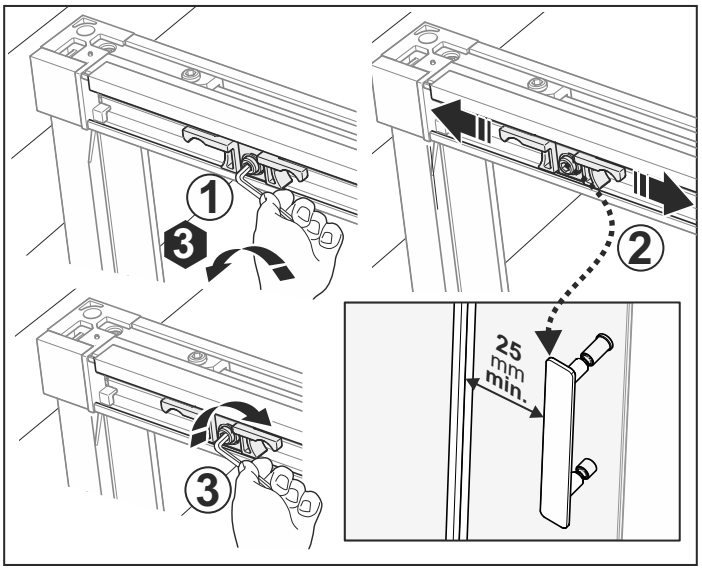

69

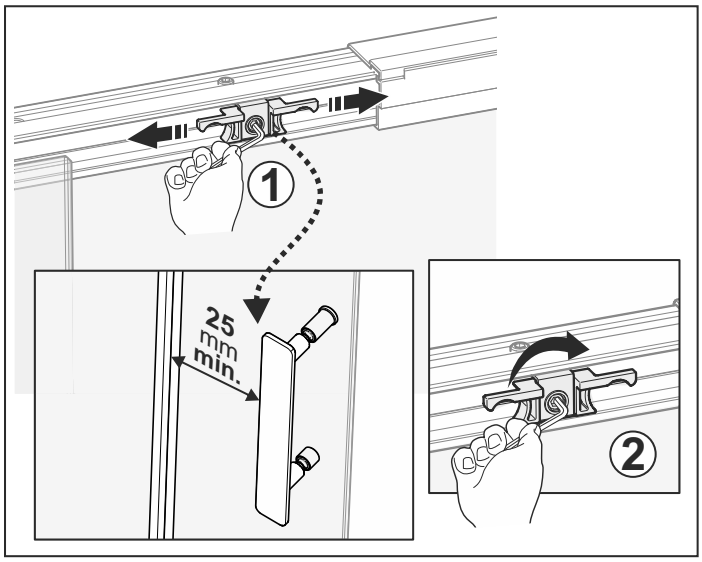

70

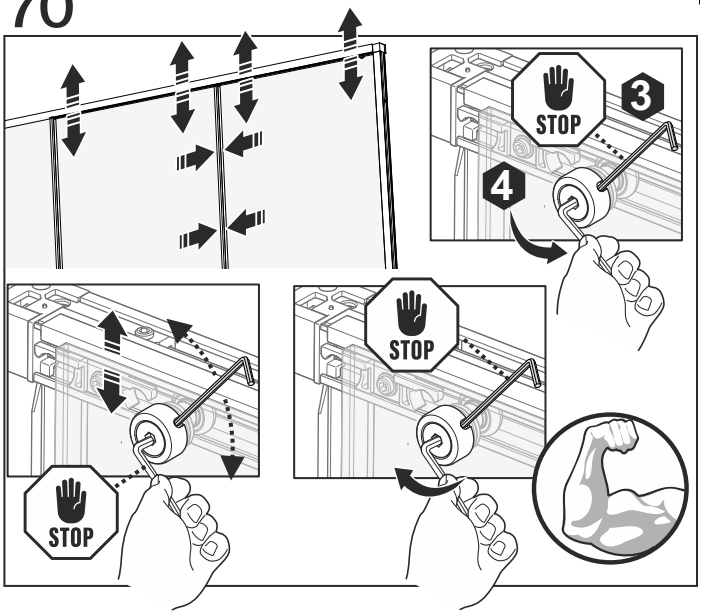

71

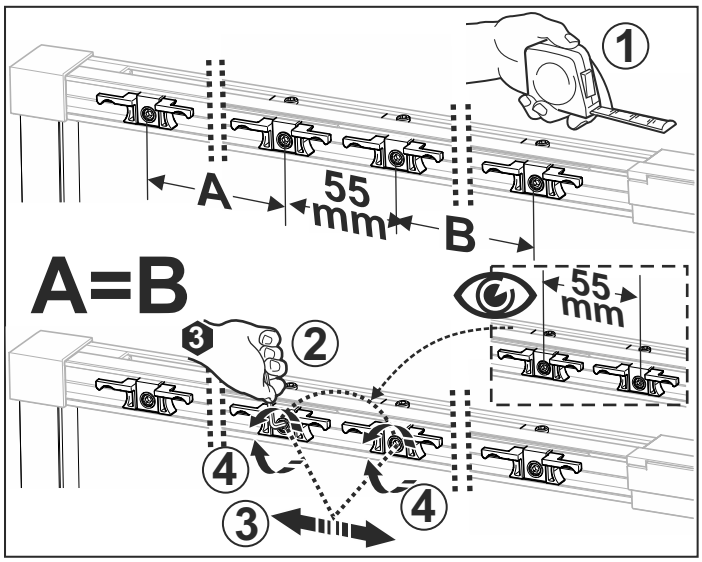

72

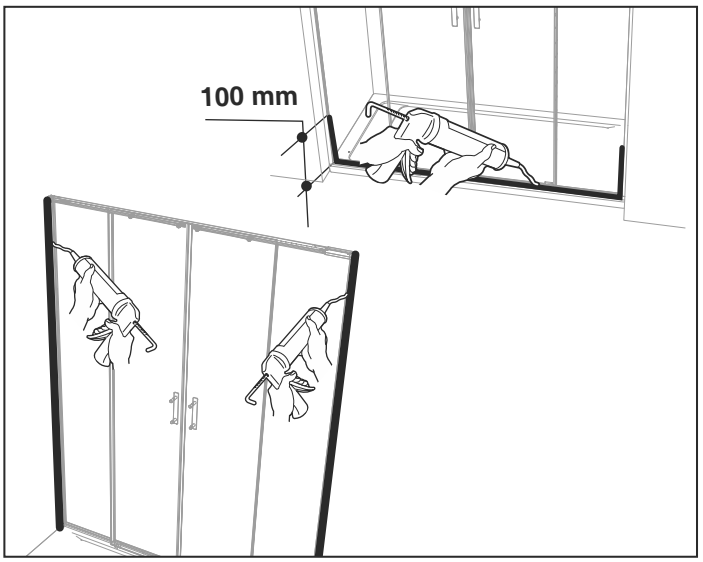

Roca Sanitario, S.A.U.
Avda Diagonal, 513
08029 Barcelona - España
roca.es

Línea de atención al cliente
Servicio Técnico Sanitario

+34 933 661 266

MTG1136-c

Roca